BRAKE SYSTEM

PRECAUTIONS

1. **Care must be taken to replace each part properly as it could affect the performance of the brake system and result in a driving hazard. Replace the parts with parts of the same part number or equivalent.**
2. **It is very important to keep parts and the area clean when repairing the brake system.**

TROUBLESHOOTING

Problem	Possible cause	Remedy	Page
Low or spongy pedal	Linings worn Brake pads worn Leak in brake system Master cylinder faulty Air in brake system Wheel cylinder faulty Brake cylinder faulty Piston seals worn or damaged Rear brake automatic adjuster faulty	Replace brake shoes Replace pads Repair leak Repair or replace master cylinder Bleed brake system Repair wheel cylinder Repair cylinder Repair brake cylinder Repair or replace adjuster	BR–40, 47 55 BR–18, 26 33 BR–10 BR–8 BR–40, 47 55 BR–18, 26 33 BR–18, 26 33 BR–40, 47 55
Brakes drag	Parking brake out of adjustment Binding parking brake wire Booster push rod out of adjustment Tension or return spring faulty Brake line restricted Lining cracked or distorted Pad cracked or distorted Wheel cylinder or caliper piston sticking Adjuster broken Master cylinder faulty	Adjust parking brake Repair as necessary Adjust push rod Replace spring Repair as necessary Replace shoe Replace pad Repair as necessary Replace adjuster Repair or replace master cylinder	BR–9 BR–17 BR–40, 47 55 BR–40, 47 55 BR–18, 26 33 BR–18, 26 33 BR–10
Brakes pull	Tires improperly inflated Oil or grease on shoes or pads Brake shoes distorted, linings worn or glazed Brake pads distorted, worn or glazed Drum or disc out of round Tension or return spring faulty Wheel cylinder faulty Brake cylinder faulty Piston frozen in brake cylinder Brake pad sticking	Inflate tires to proper pressure Check for cause. Replace shoes or pads Replace brake shoes Replace pads Replace drum or disc Replace spring Repair wheel cylinder Repair cylinder Repair cylinder Replace pads	BR–40, 47 55 BR–18, 26 33 BR–18, 26 33,40 47, 55 BR–40, 47 55 BR–18, 26 33 BR–18, 26 33 BR–18, 26 33

PRECAUTIONS

1. **Care must be taken to replace each part properly as it could affect the performance of the brake system and result in a driving hazard. Replace the parts with parts of the same part number or equivalent.**
2. **It is very important to keep parts and the area clean when repairing the brake system.**

TROUBLESHOOTING

Problem	Possible cause	Remedy	Page
Low or spongy pedal	Linings worn Brake pads worn Leak in brake system Master cylinder faulty Air in brake system Wheel cylinder faulty Brake cylinder faulty Piston seals worn or damaged Rear brake automatic adjuster faulty	Replace brake shoes Replace pads Repair leak Repair or replace master cylinder Bleed brake system Repair wheel cylinder Repair cylinder Repair brake cylinder Repair or replace adjuster	BR–40, 47 55 BR–18, 26 33 BR–10 BR–8 BR–40, 47 55 BR–18, 26 33 BR–18, 26 33 BR–40, 47 55
Brakes drag	Parking brake out of adjustment Binding parking brake wire Booster push rod out of adjustment Tension or return spring faulty Brake line restricted Lining cracked or distorted Pad cracked or distorted Wheel cylinder or caliper piston sticking Adjuster broken Master cylinder faulty	Adjust parking brake Repair as necessary Adjust push rod Replace spring Repair as necessary Replace shoe Replace pad Repair as necessary Replace adjuster Repair or replace master cylinder	BR–9 BR–17 BR–40, 47 55 BR–40, 47 55 BR–18, 26 33 BR–18, 26 33 BR–10
Brakes pull	Tires improperly inflated Oil or grease on shoes or pads Brake shoes distorted, linings worn or glazed Brake pads distorted, worn or glazed Drum or disc out of round Tension or return spring faulty Wheel cylinder faulty Brake cylinder faulty Piston frozen in brake cylinder Brake pad sticking	Inflate tires to proper pressure Check for cause. Replace shoes or pads Replace brake shoes Replace pads Replace drum or disc Replace spring Repair wheel cylinder Repair cylinder Repair cylinder Replace pads	BR–40, 47 55 BR–18, 26 33 BR–18, 26 33,40 47, 55 BR–40, 47 55 BR–18, 26 33 BR–18, 26 33 BR–18, 26 33

TROUBLESHOOTING (Cont'd)

Problem	Possible cause	Remedy	Page
Hard pedal but brakes inefficient	Oil or grease on shoes or pads	Check for cause. Replace shoes or pads	
	Brake shoes distorted, linings worn or glazed, drums worn	Replace brake shoes	BR–40, 47 55
	Brake pads distorted, worn or glazed	Replace pads	BR–18, 26 33
	Piston frozen in brake cylinder	Repair cylinder	BR–18, 26 33
	Brake booster faulty	Repair booster	BR–16
	Vacuum leaks	Repair as necessary	
	Brake line restricted	Repair as necessary	
Snapping or clicking noise when brakes are applied	(Drum brake)		
	Brake shoes binding at backing plate ledges	Lubricate	BR–40, 47 55
	Backing plate ledges worn	Replace and lubricate ledges	BR–40, 47 55
	Loose or missing shoe hold–down spring	Replace shoe hold–down spring	BR–40, 47 55
	Loose set bolt at backing plate	Tighten	BR–40, 47 55
	(Disc brake)		
	Loose or missing pad support plate	Replace pad support plate	BR–18, 26 33
	Loose installation bolt	Tighten	BR–18, 26 33
Scraping or grinding noise when brakes are applied	Worn brake linings or pads	Replace or refinish drums or rotors if heavily scored	BR–18, 26 33,40 47, 55
	Caliper to wheel or rotor interference	Replace as required	BR–18, 26 33
	Dust cover to rotor or backing plate to drum interference	Correct or replace	BR–18, 26 33,40 47, 55
	Other brake system components faulty	Repair or replace as necessary	
	Tires rubbing against chassis and/or body	Repair as necessary	

TROUBLESHOOTING (Cont'd)

Problem	Possible cause	Remedy	Page
Squeaking, squealing groaning or chattering noise when brakes are applied HINT: Brake friction materials inherently generate noise and heat in order to dissipate energy. As a result, occasional squeal is normal and is aggravated by severe environmental conditions such as cold, heat, wetness, snow, salt, mud, etc. This occasional squeal is not a functional problem and does not indicate any loss of brake effectiveness	Brake drums and linings, rotors and pads worn or scored Dirty, greased, contaminated or glazed linings or pads Improper linings or pads using Maladjustment of brake pedal or booster push rod (Disc brake) Missing or damaged brake pad anti–squeal shim Pad wear and pad wear indicator making contact with the rotor Burred or rusted calipers (Drum brake) Weak damaged or incorrect shoe hold–down springs, loose or damaged shoe hold–down spring pins and springs and grooved backing plate ledges	Inspect, repair or replace Clean or replace Inspect for correct usage or replace Inspect and adjust Replace Replace Clean or deburr Inspect, repair or replace	BR–18, 26 33,40 47, 55 BR–18, 26 33,40 47, 55 BR–6, 17 BR–1 8, 26 33 BR–18, 26 33 BR–18, 26 33 BR–40, 47 55
Squealing and squeaking noise when brakes are not applied	Mal–adjustment of brake pedal or booster push rod Poor return of brake booster or master cylinder or brake cylinder (Disc brake) Rusted or stuck piston Improper positioning of pad in caliper Rotor rubbing against caliper housing Improper installation of disc brake pad support plate Pad wear and pad wear indicator making contact with the rotor (Drum brake) Weak, damaged or incorrect shoe hold–down springs Grooved backing plate ledges Bent or warped backing plate causing interference with drum Improper machining of drum causing interference with backing plate or shoe Other brake system components: Loose or extra parts in brakes Rear drum adjustment too tight causing lining to glaze Worn, damaged or insufficiently lubricated wheel bearings	Inspect and adjust Inspect, repair or replace Inspect and lubricate as necessary Reinstall correctly Inspect and replace Reinstall correctly Replace Replace Repair or replace Repair or replace Replace drum Inspect, repair or replace as necessary	BR–6, 17 BR–10, 16 18,26 33,40 47, 55 BR–18, 26 33 BR–18, 2 33 BR–18, 26 33 BR–40, 47 55 BR–40, 47 55 BR–40, 47 55 BR–40, 47 55 BR–40, 47 55

TROUBLESHOOTING (Cont'd)

Problem	Possible cause	Remedy	Page
Groaning, clicking or rattling noise when brakes are not applied	Stones or foreign material trapped inside wheel covers	Remove foreign material	
	Loose wheel nuts	Tighten to correct torque Replace if stud holes are elongated	
	Mal–adjustment of brake pedal or booster push rod	Inspect and adjust	BR–6, 17
	Worn, damaged or dry wheel bearings (Disc brake)	Inspect and lubricate or replace	
	Loose or missing anti–rattle spring or pad support plate or crimping on outer pad	Inspect, repair or replace	BR–18, 26 33
	Failure of shim	Inspect, replace if necessary	BR–18, 26 33
	Wear on slide bushing	Inspect, replace if necessary	BR–18, 26 33
	Loose installation bolt	Inspect, tighten if necessary	BR–18, 26 33
	Poor return of piston	Inspect, repair or replace	BR–18, 26 33
	(Drum brake) Loose or extra parts	Inspect and repair	BR–40, 47 55

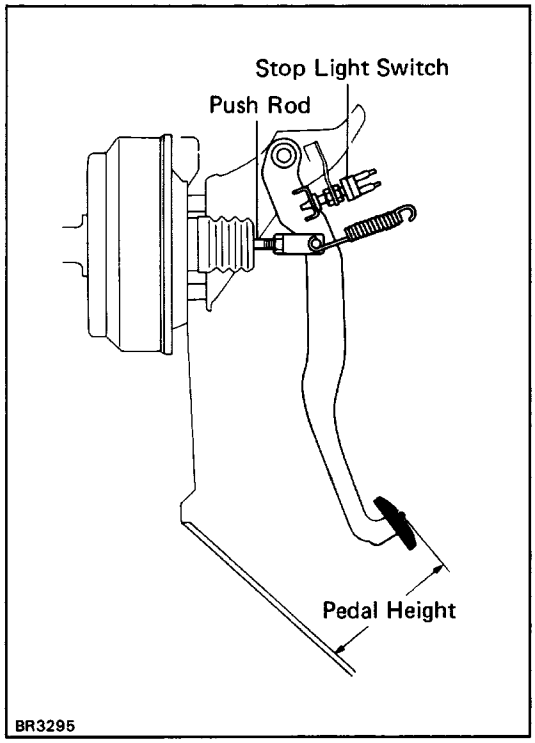

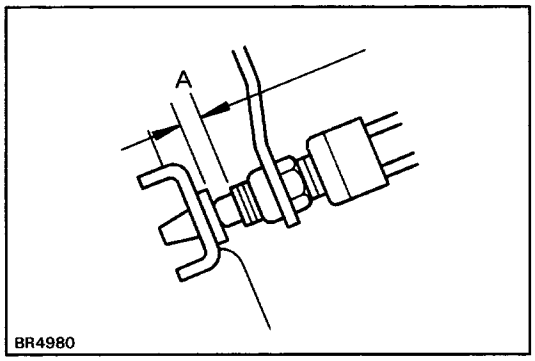

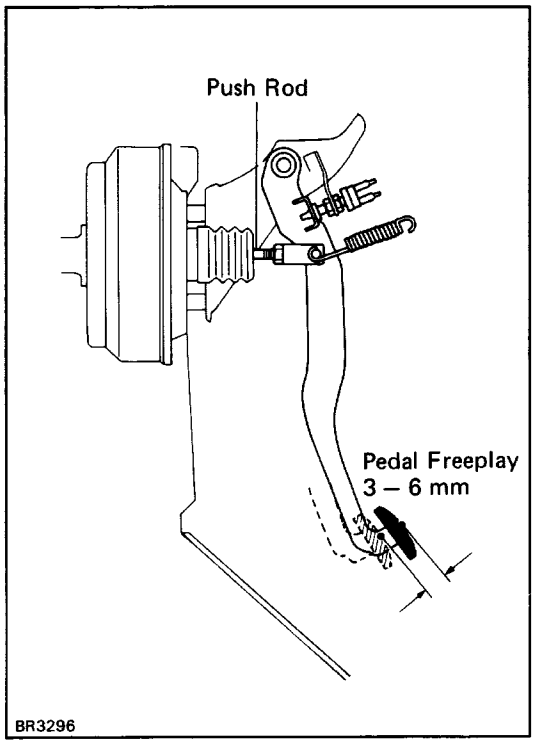

CHECKS AND ADJUSTMENTS

CHECK AND ADJUSTMENT OF BRAKE PEDAL

1. CHECK THAT PEDAL HEIGHT IS CORRECT, AS SHOWN

PEDAL HEIGHT FROM ASPHALT SHEET:
2WD 148 MM (5.83 IN.)
4WD 145 MM (5.71 IN.)

2. IF NECESSARY, ADJUST PEDAL HEIGHT

(a) Disconnect the connector from the stop light switch.

(b) Loosen the stop light switch lock nut and remove the stop light switch.

(c) Loosen the push rod lock nut.

(d) Adjust the pedal height by turning the pedal push rod.

(e) Tighten the push rod lock nut.
Torque: 25 N–m (260 kgf–cm, 19 ft–lbf)

(f) Install the stop light switch and turn it until it lightly contacts the pedal stopper.

(g) Return the stop light switch one turn.

(f) Check the clearance

(A) between stop light switch and pedal.
Clearance: 0.5 – 2.4mm (0.02 – 0.09 in.)

(i) Tighten the stop light switch lock nut.

(j) Check that the stop light come on when the brake pedal is depressed, and go off when the brake pedal is released.

(k) After adjusting the pedal height, check the pedal free play.
HINT: If clearance

(A) between the stop light switch and the pedal stopper has been adjusted correctly, the pedal freeplay will meet the specifications.

3. CHECK THAT PEDAL FREEPLAY IS CORRECT, AS SHOWN

(a) Stop the engine and depress the brake pedal several times until there is no more vacuum left in the booster.

(b) (Single booster)
Push in the pedal until the beginning of resistance is felt. Measure the distance, as shown.
(Tandem booster)
Push in the pedal by hand until the beginning of the second resistance is felt, measure the distance, as shown.
Pedal freeplay: 3 – 6mm (0.12 – 0.24 in.)
(Tandem booster)
HINT: The freeplay to the first resistance is due to the play between the clevis and pin. And it is 1 – 3mm (0.04 – 0.12 in.) on the pedal.

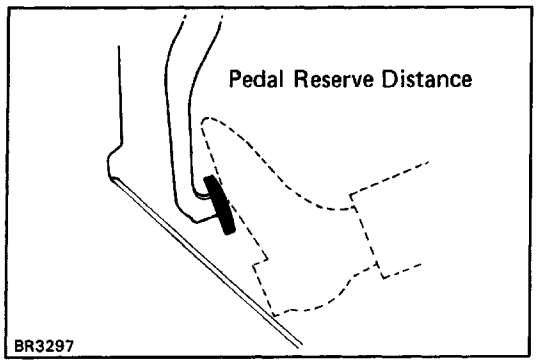

4. CHECK THAT PEDAL RESERVE DISTANCE IS CORRECT, AS SHOWN

Release the parking brake.

With engine running, depress the pedal and measure the pedal reserve distance, as shown.

Pedal reserve distance from asphalt sheet at 490 N (50 kgf, 110.2 lbf):

(2WD)	
22R–E Engine	**More than 70 mm (2.76 in.)**
3VZ–E Engine	
1 ton	**More than 75 mm (2.95 in.)**
1/2 ton	**More than 65 mm (2.56 in.)**
C&C	
SRW	**More than 75 mm (2.95 in.)**
DRW	**More than 55 mm (2.17 in.)**
(4WD)	**More than 65 mm (2.56 in.)**

If incorrect, troubleshoot the brake system.

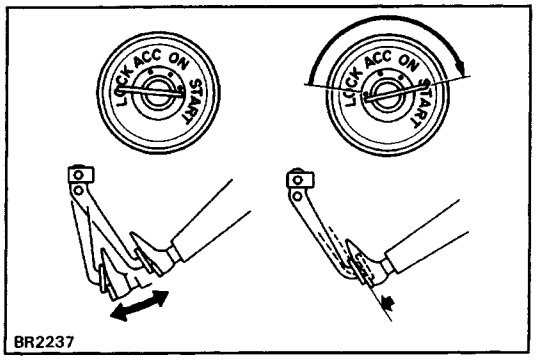

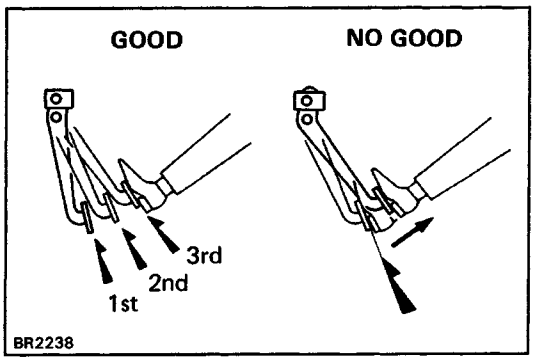

OPERATIONAL TEST OF BRAKE BOOSTER

HINT: If available, use a brake booster tester to check the booster operating condition.

1. OPERATING CHECK

(a) Depress the brake pedal several times with the en– gine off, and check that there is no change in the pedal reserve distance.

(b) Depress the brake pedal and start engine. If the pedal goes down slightly, operation is normal.

2. AIR TIGHTNESS CHECK

(a) Start the engine and stop it after one or two min– utes. Depress the brake pedal several times slowly. If the pedal goes down deepest the first time, but gradually rises after the second or third time, the booster is air tight.

(b) Depress the brake pedal while the engine is running, and stop it with the pedal depressed . If there is no change in pedal reserve travel after holding' the pedal for thirty seconds, the booster is air tight.

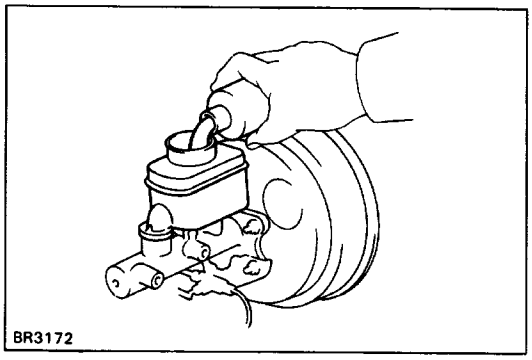

BLEEDING OF BRAKE SYSTEM

HINT: If any work is done on the brake system or if air is suspected in the brake lines, bleed the system of air.

NOTICE: Do not let brake fluid remain on a painted surface. Wash it off immediately.

1. FILL BRAKE RESERVOIR WITH BRAKE FLUID

Check the fluid level in the reservoir after bleeding each wheel. Add fluid, if necessary.

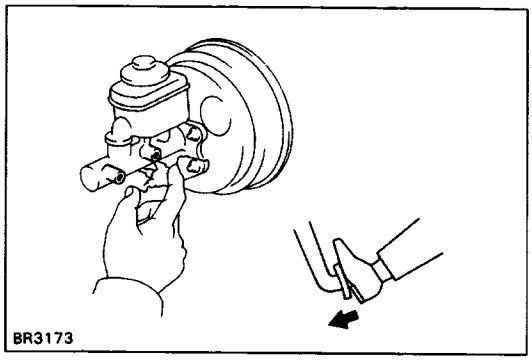

2. BLEED MASTER CYLINDER

HINT: If the master cylinder was disassembled or if the reservoir tank becomes empty, bleed the air from the master cylinder.

(a) Disconnect the brake tubes from the master cylinder.

(b) Slowly depress the brake pedal and hold it.

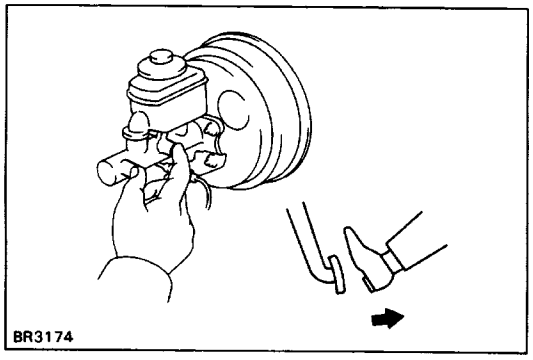

(c) Block off the outlet plug with your finger, and release the brake pedal.

(d) Repeat

(b) and

(c) three or four times.

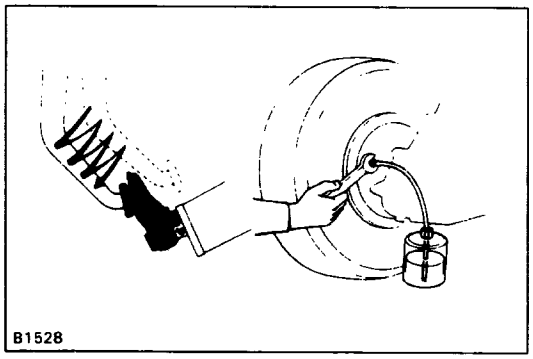

3. CONNECT VINYL TUBE TO WHEEL CYLINDER BLEEDER PLUG

Insert other end of the tube in a half–full container of brake fluid.

HINT: Begin air bleeding from the wheel cylinder with the longest hydraulic line.

4. BLEED BRAKE LINE

(a) Slowly depress the brake pedal several times.

(b) While an assistant depresses the pedal, loosen the bleeder plug until fluid starts to run out. Then close the bleeder plug.

(c) Repeat this procedure until there are no more air bubbles in the fluid.

Bleeder plug tightening torque:

11 N–m (110 kgf–cm, 8 ft–lbf)

5. REPEAT PROCEDURE FOR EACH WHEEL

6. BLEED LSP & BV

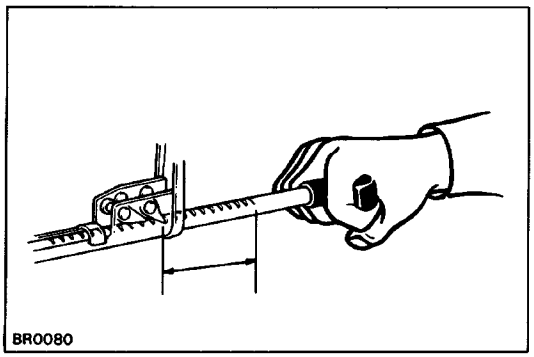

CHECK AND ADJUSTMENT OF PARKING BRAKE

1. CHECK THAT PARKING BRAKE LEVER TRAVEL IS CORRECT

Pull the parking brake lever all the way up, and count the number of clicks.

Parking brake lever travel at 196 N (20 kgf, 44.1 lbf)

2WD 1/2 ton 12 – 18 clicks

1 ton 11 – 17 clicks

4WD 11 – 17 clicks

2. IF NECESSARY, ADJUST PARKING BRAKE

HINT: Before adjusting the parking brake, make sure that the rear brake shoe clearance has been adjusted.

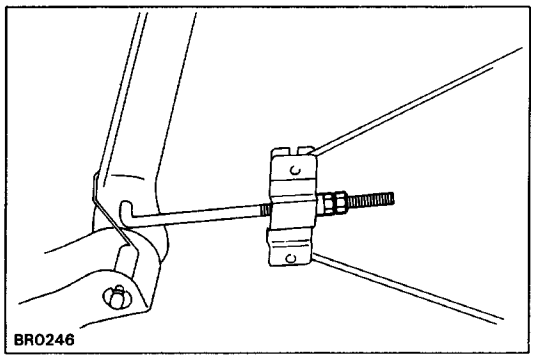

(2WD)

(a) Tighten the adjusting nut until the travel is correct. Then tighten the lock nut.

(b) After adjusting the parking brake, confirm that the rear brakes are not dragging.

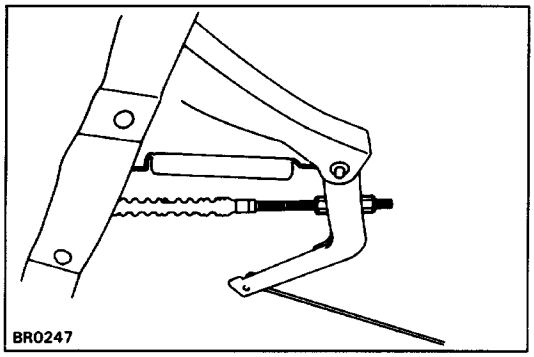

(4WD)

(a) Tighten one of the adjusting nuts of the intermediate lever while loosening the other one until the travel is correct. Tighten the two adjusting nuts.

(b) After adjusting the parking brake, confirm that the bellcrank stopper screw comes in contact with the backing plate.

MASTER CYLINDER

REMOVAL OF MASTER CYLINDER

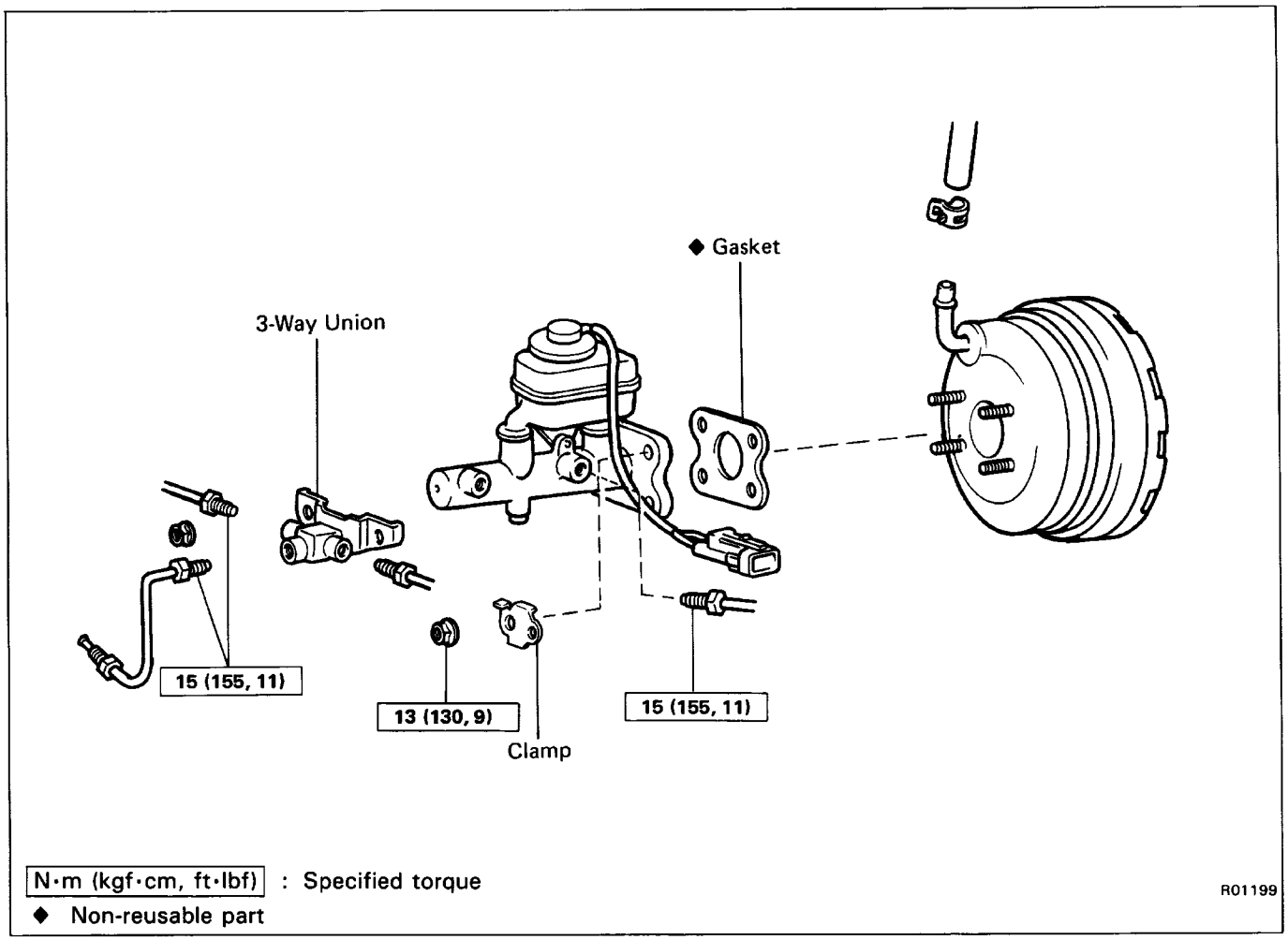

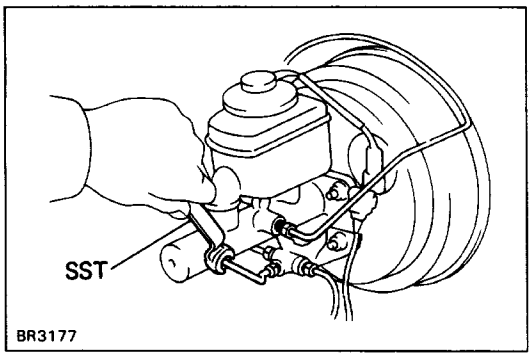

1. DISCONNECT LEVEL WARNING SWITCH CONNECTOR

2. DRAW OUT FLUID WITH SYRINGE

NOTICE: Do not let brake fluid remain on a painted surface. Wash it off immediately.

3. DISCONNECT BRAKE TUBES

Using SST, disconnect the brake tubes from the master cylinder.

SST 09751–36011

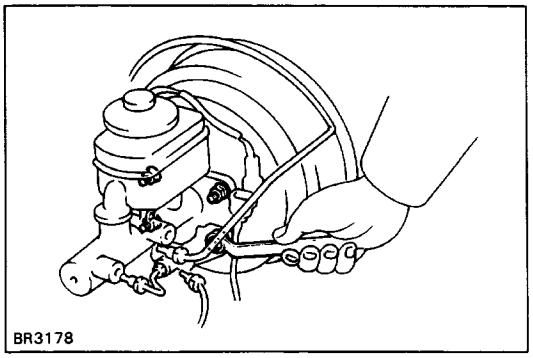

4. REMOVE MASTER CYLINDER

(a) Remove the four nuts and 3–way union.

(b) Remove the clamp.

(c) Remove the master cylinder and gasket from the brake booster.

COMPONENTS

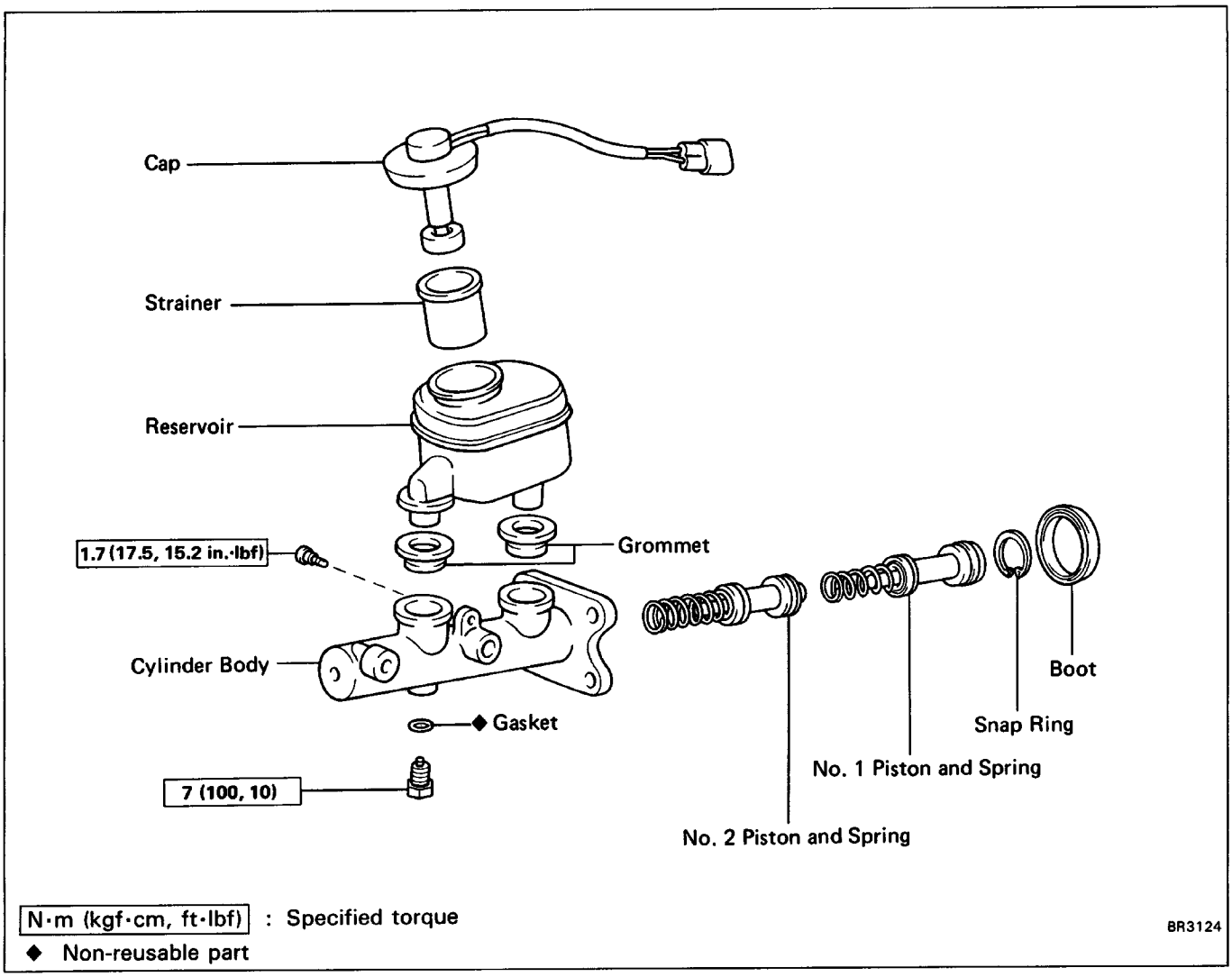

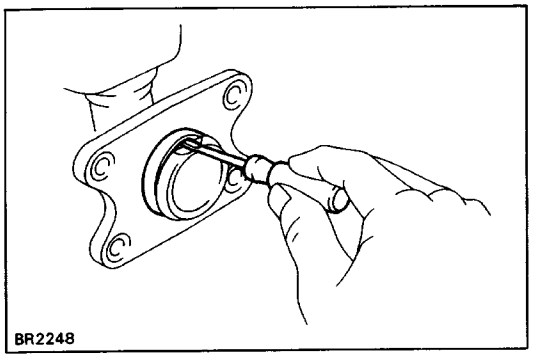

DISASSEMBLY OF MASTER CYLINDER

1. REMOVE MASTER CYLINDER BOOT

Using a screwdriver, remove the master cylinder boot.

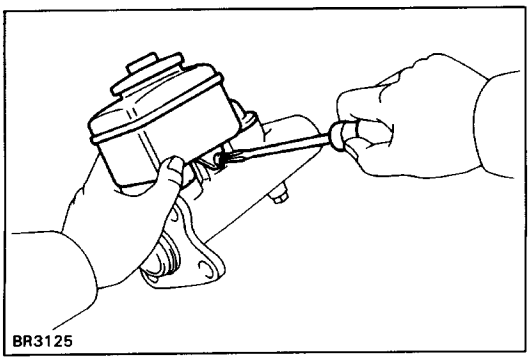

2. REMOVE RESERVOIR

(a) Remove the set screw and pull out the reservoir.
(b) Remove the cap and strainer from the reservoir.

3. REMOVE TWO GROMMETS

4. PLACE CYLINDER IN VISE

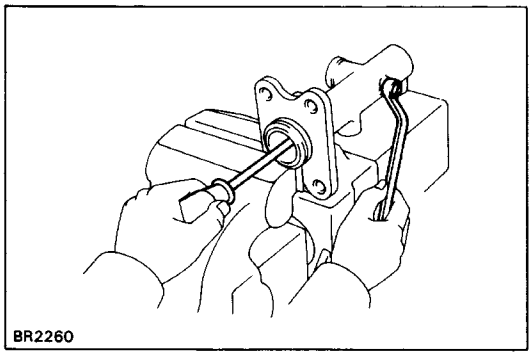

5. REMOVE PISTON STOPPER BOLT

Using a screwdriver, push the pistons in all the way and remove the piston stopper bolt and gasket.
HINT: Tape the screwdriver tip before use.

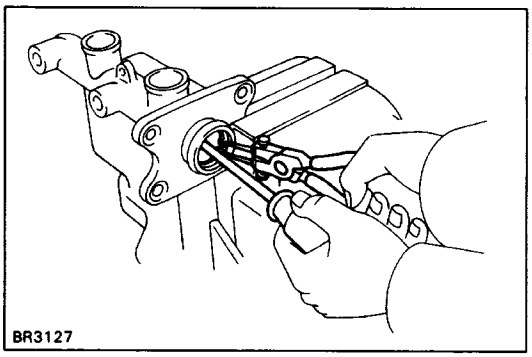

6. REMOVE TWO PISTONS AND SPRINGS

(a) Push in the piston with a screwdriver and remove the snap ring with snap ring pliers.

(b) Remove the No. 1 piston and spring by hand, pulling straight out, not at an angle.
NOTICE: If pulled out at an angle, there is possibility of damaging the cylinder bore.

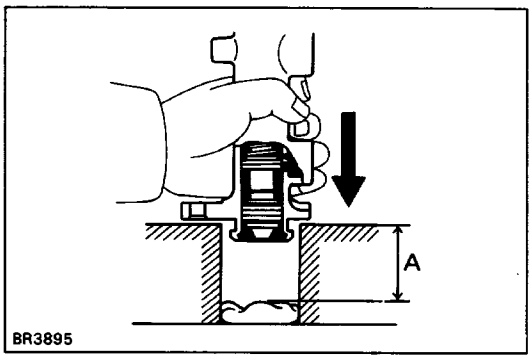

(c) Place a rag and two wooden blocks on the work table, and lightly tap the cylinder flange against the block edges until the No.2 piston drops out of cylinder.
HINT: Make sure the distance
(A) from the rag to the top of the blocks is at least 100 mm (3.94 in.).

INSPECTION OF MASTER CYLINDER COMPONENTS

HINT: Clean the disassembled parts with compressed air.

1. INSPECT CYLINDER BORE FOR RUST OR SCORING

2. INSPECT CYLINDER FOR WEAR OR DAMAGE

If necessary, clean or replace the cylinder.

ASSEMBLY OF MASTER CYLINDER

(See page BR–11)

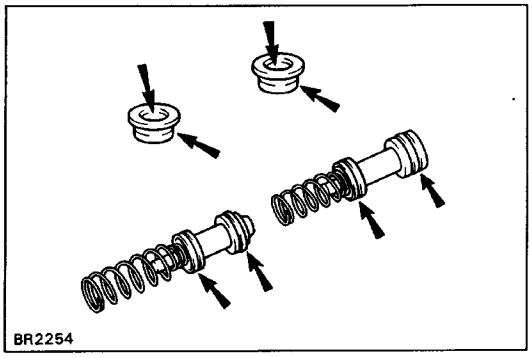

1. APPLY LITHIUM SOAP BASE GLYCOL GREASE TO RUBBER PARTS INDICATED BY ARROWS

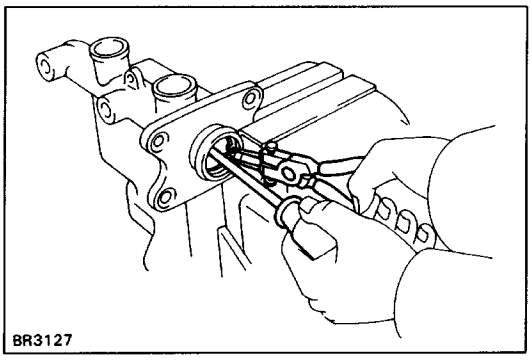

2. INSTALL TWO SPRINGS AND PISTONS

NOTICE: Be careful not to damage the rubber lips on the pistons.

(a) Insert the two springs and pistons straight in, not at an angle.

NOTICE: If inserted at an angle, there is a possibility of damaging the cylinder bore.

(b) Push in the piston with a screwdriver and install the snap ring with snap ring pliers.

HINT: Tape the screwdriver tip before use.

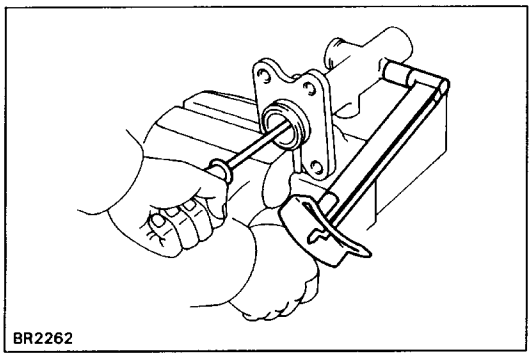

3. INSTALL PISTON STOPPER BOLT

Using a screwdriver, push the piston in all the way and install the piston stopper bolt over the gasket. Torque the bolt.

Torque: 10 N–m (100 kgf–cm, 7 ft–lbf)

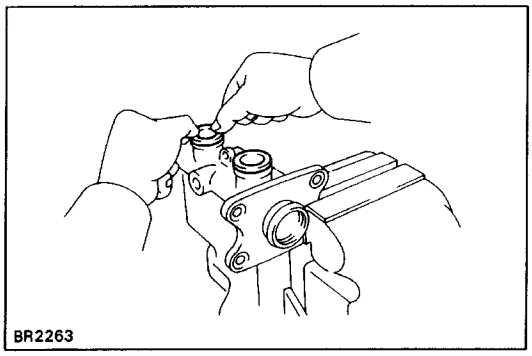

4. INSTALL TWO GROMMETS

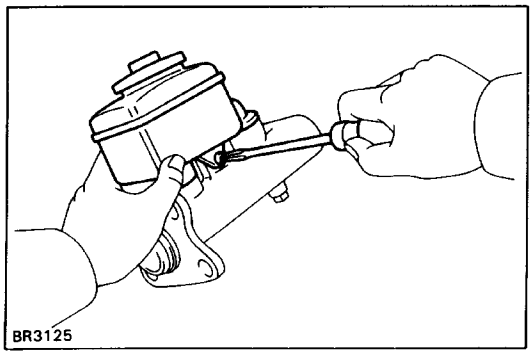

5. INSTALL RESERVOIR

(a) Install the cap and strainer to the reservoir.

(b) Push the reservoir onto the cylinder.

(c) Install the set screw while pushing on the reservoir.

Torque: 1.7 N–m (17.5 kgf–cm, 15.2 in. –lbf)

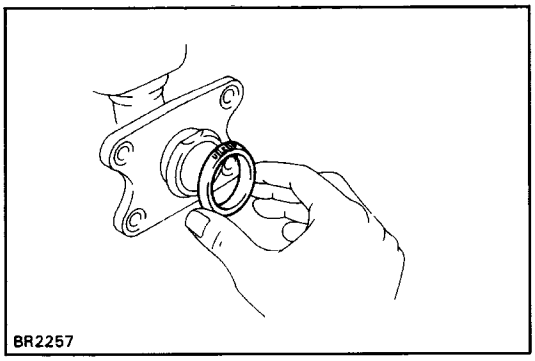

6. INSTALL MASTER CYLINDER BOOT

Facing the up mark on the master cylinder boot upwards, install the cylinder boot to the master cylinder.

INSTALLATION OF MASTER CYLINDER

(See page BR–10)

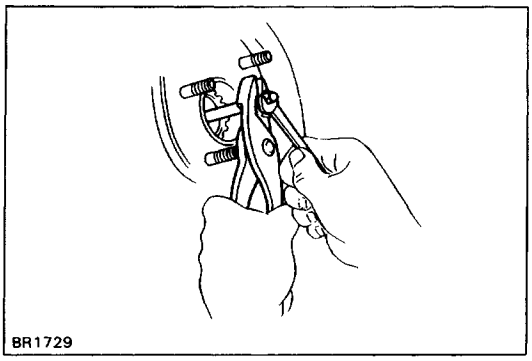

1. ADJUST LENGTH OF BRAKE BOOSTER PUSH ROD BEFORE INSTALLING MASTER CYLINDER

(See page BR–17)

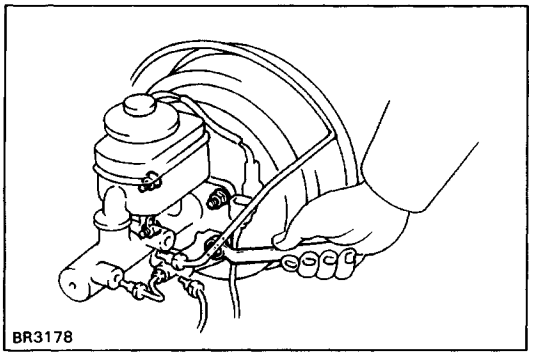

2. INSTALL MASTER CYLINDER

Install the master cylinder and gasket on the brake booster with four nuts.

Torque: 13 N–m (130 kgf–cm, 9 ft–lbf)

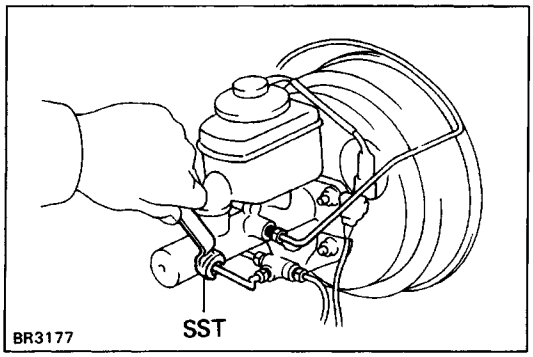

3. CONNECT TWO BRAKE TUBES

Using SST, connect the brake tubes to the master cylin–der. Torque the union nuts.

SST 09751–36011

Torque: 15 N–m (155 kgf–cm, 11 ft–lbf)

4. CONNECT LEVEL WARNING SWITCH CONNECTOR

5. FILL BRAKE RESERVOIR WITH BRAKE FLUID AND BLEED BRAKE SYSTEM

(See page BR–8)

6. CHECK FOR FLUID LEAKAGE

7. CHECK AND ADJUST BRAKE PEDAL

(See page BR–6)

BRAKE BOOSTER

REMOVAL OF BRAKE BOOSTER

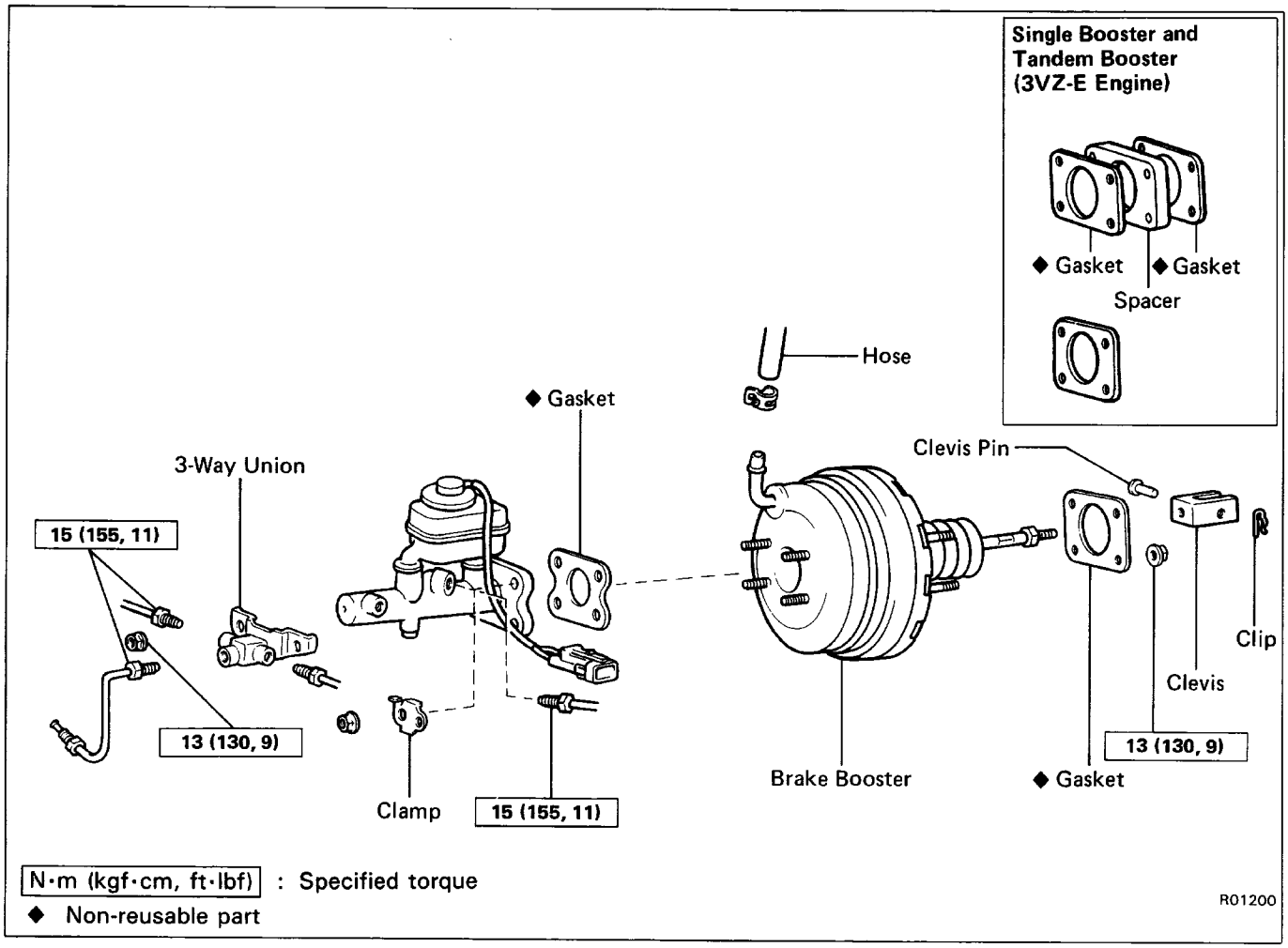

1. REMOVE MASTER CYLINDER
(See page BR–10)

2. DISCONNECT VACUUM HOSE FROM BRAKE BOOSTER

3. REMOVE PEDAL RETURN SPRING

4. REMOVE CLIP AND CLEVIS PIN

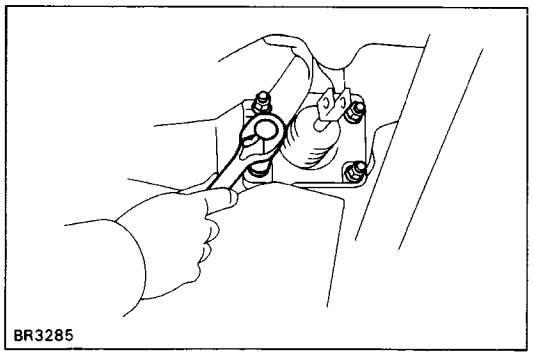

5. REMOVE BRAKE BOOSTER, GASKET AND CLEVIS

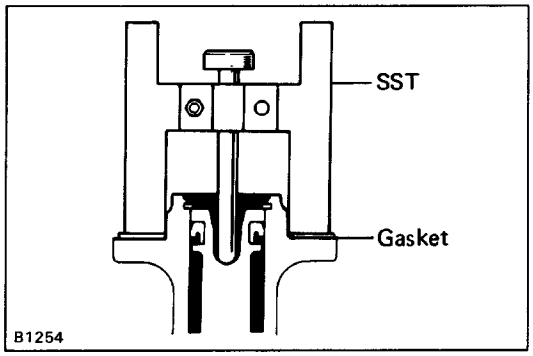

INSTALLATION OF BRAKE BOOSTER
(See page BR–16)

1. ADJUST LENGTH OF BOOSTER PUSH ROD

(a) Install the gasket on the master cylinder.

(b) Set the SST on the gasket, and lower the pin until its tip slightly touches the piston.
SST 09737–00010

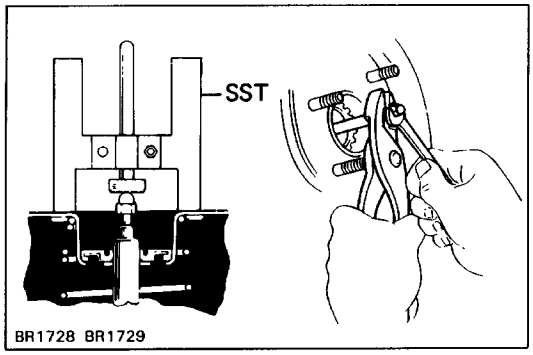

(c) Turn the SST upside down, and set it on the booster.
SST 09737–00010

(d) Measure the clearance between the booster push rod and pin head (SST).
Clearance: 0 mm (0 in.)

(e) Adjust the booster push rod length until the push rod lightly touches the pin head.

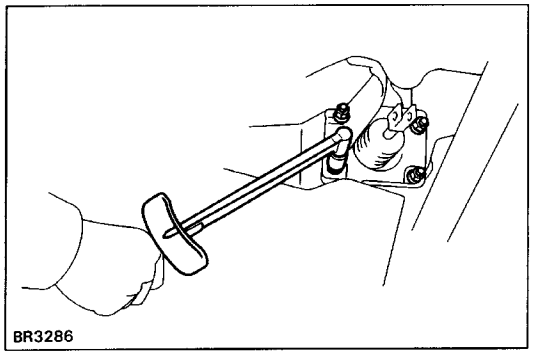

2. INSTALL BRAKE BOOSTER, GASKET AND CLEVIS

(a) Install the booster and gasket.

(b) Install the clevis.

(c) Install and torque the booster mounting nuts.
Torque: 13 N–m (130 kgf–cm, 9 ft–lbf)

3. CONNECT CLEVIS TO BRAKE PEDAL

Insert the clevis pin into the clevis and brake pedal and install the clip to the clevis pin.

4. INSTALL PEDAL RETURN SPRING

5. INSTALL MASTER CYLINDER
(See page BR–15)

6. CONNECT HOSE TO BRAKE BOOSTER

7. FILL BRAKE RESERVOIR WITH BRAKE FLUID AND BLEED BRAKE SYSTEM
(See page BR–8)

8. CHECK FOR FLUID LEAKAGE

9. CHECK AND ADJUST BRAKE PEDAL
(See page BR–6)

10. PERFORM OPERATIONAL CHECK
(See page BR–7)

FRONT BRAKE
2WD (PD60 66 Type Disc)
COMPONENTS

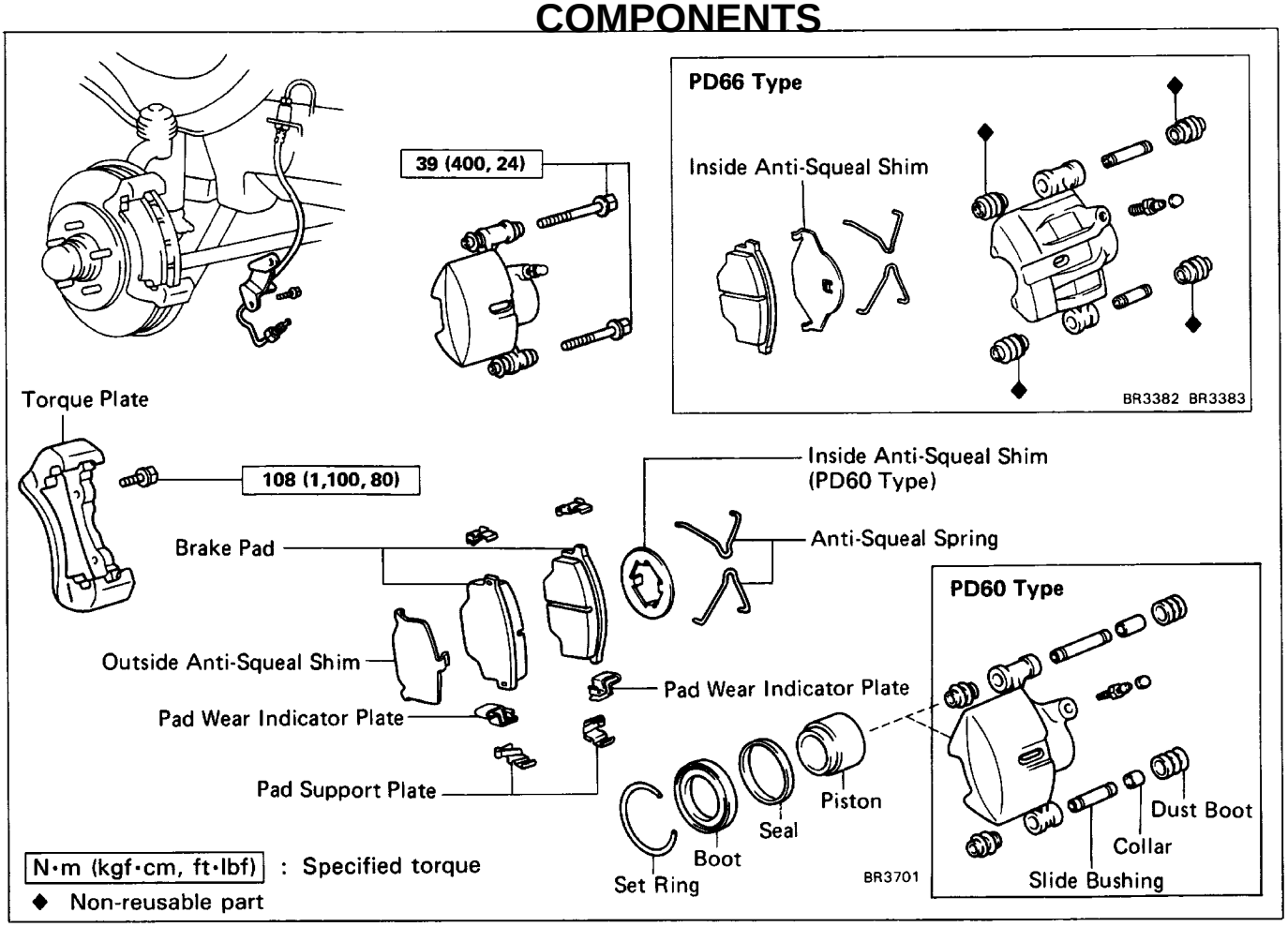

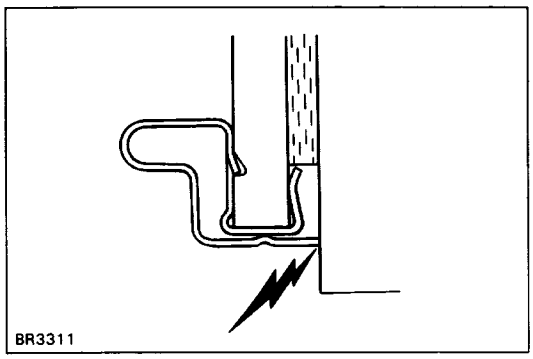

REPLACEMENT OF BRAKE PADS

HINT: If a squealing noise occurs from the front brakes while driving, check the pad wear indicator. If there are traces of the indicator contacting the rotor disc, the brake pad should be replaced.

1. REMOVE FRONT WHEEL

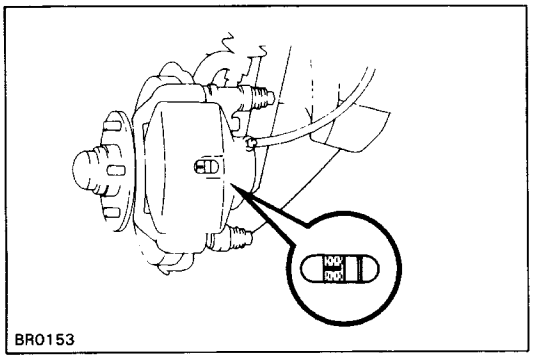

2. INSPECT PAD LINING THICKNESS

Check the pad thickness through the cylinder inspection hole and replace pads if not within specification.

Minimum thickness: 1.0 mm (0.039 in.)

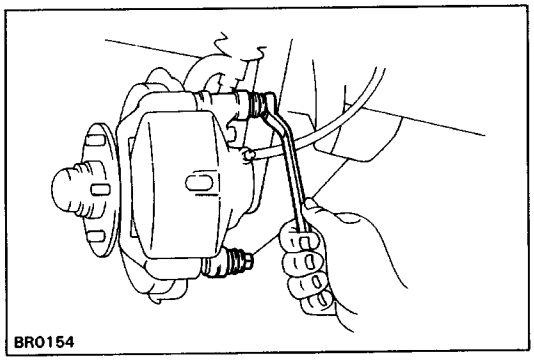

3. LIFT UP CYLINDER

(a) Remove the installation bolt from the torque plate.

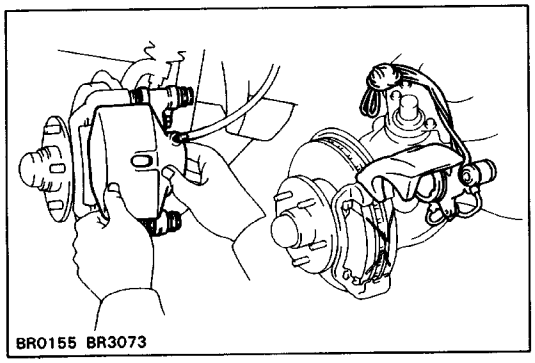

(b) Lift up the brake cylinder and suspend it so the hose is not stretched.
HINT: Do not disconnect the brake hose.

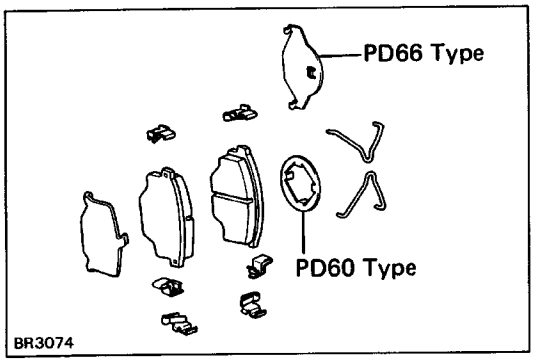

4. REMOVE FOLLOWING PARTS:

(a) Two anti–squeal springs
(b) Two brake pads
(c) Two anti–squeal shims
(d) Two pad wear indicator plates
(e) Four pad support plates

5. CHECK ROTOR DISC THICKNESS
(See step 2 on page BR–23)

6. CHECK ROTOR DISC RUNOUT
(See step 3 on page BR–23)

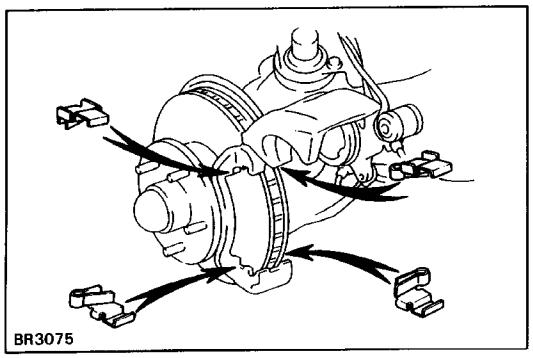

7. INSTALL PAD SUPPORT PLATES

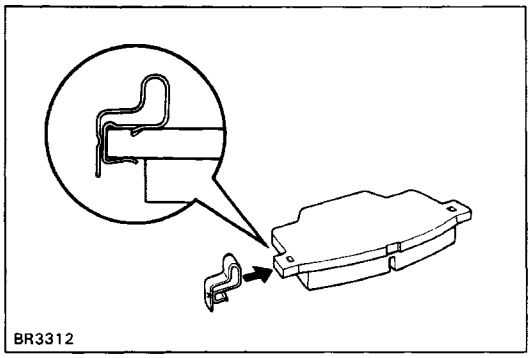

8. INSTALL NEW PADS

(a) Install a pad wear indicator plate to the pad.

(b) (PD60 Type)

Install the outside anti–squeal shim to the outside pad.

(PD66 Type)

Install the two anti–squeal shims to the each pad.

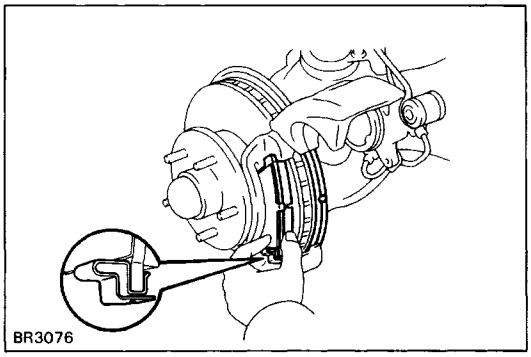

(c) Install the two pads so the wear indicator plate is facing underneath.

NOTICE: Do not allow oil or grease to get on the rub–bing face.

(d) Install the anti–squeal springs in position.

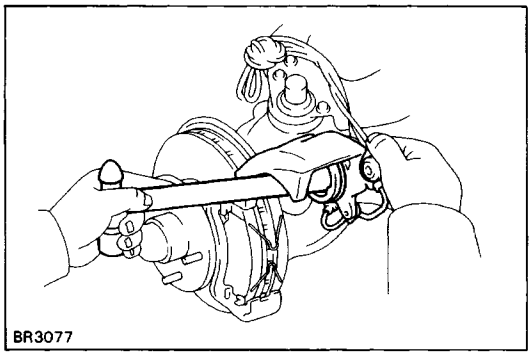

9. INSTALL CYLINDER

(a) Draw out a small amount of brake fluid from the res–ervoir.

(b) Press in piston with a hammer handle or an equiva–lent.

HINT: Always change the pad on one wheel at a time as there is a possibility of the opposite piston flying out.

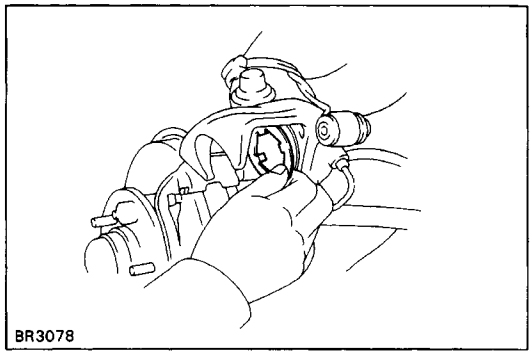

(c) (PD60 Type)

Install the inside anti–squeal shim to the piston.

(d) Insert the brake cylinder carefully so the boot is not wedged.

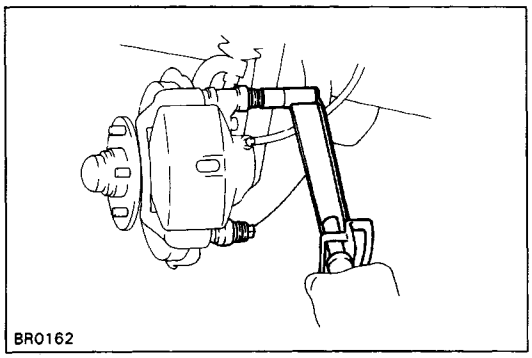

(e) Install and torque the installation bolts.

Torque: 39 N–m (400 kgf–cm, 29 ft –lbf)

10. INSTALL FRONT WHEEL

11. CHECK THAT FLUID LEVEL IS MAX LINE

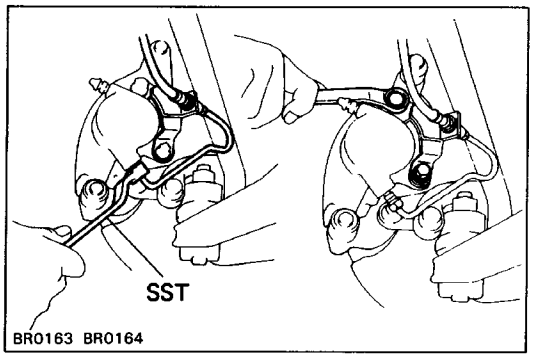

REMOVAL OF CYLINDER

(See page BR–18)

1. DISCONNECT BRAKE TUBE

(a) Using SST, disconnect the brake tube. Use a con–tainer to catch the brake fluid.
SST 09751–36011

(b) Remove the bracket from the cylinder.

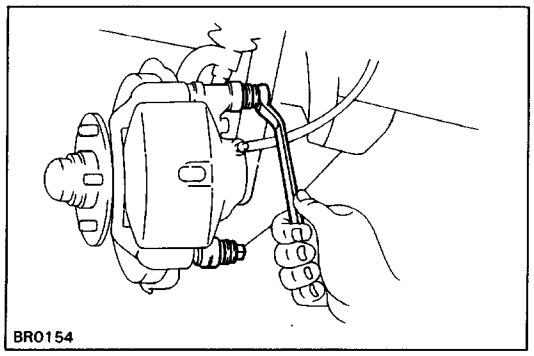

2. REMOVE CYLINDER FROM TORQUE PLATE

Remove the two installation bolts and cylinder.

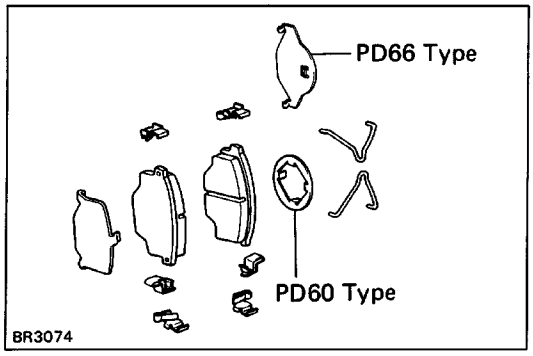

3. REMOVE PADS

(See step 4 on page BR–19)

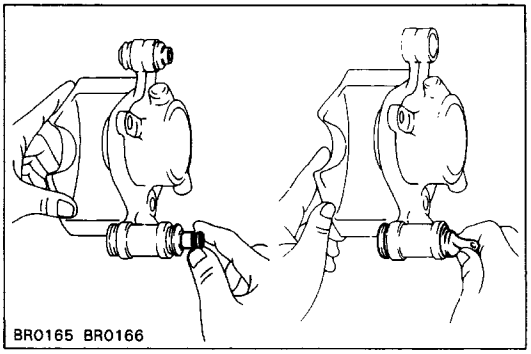

DISASSEMBLY OF CYLINDER
(See page BR–18)
1. (PD60 TYPE)
REMOVE CYLINDER SLIDING BUSHINGS, DUST BOOTS AND COLLARS

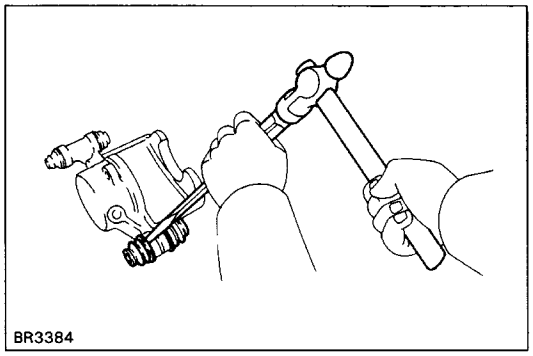

(PD66 TYPE)
REMOVE CYLINDER SLIDING BUSHINGS AND DUST BOOTS
(a) Remove the sliding bushings.
(b) Using a chisel and a hammer, remove the dust boots.

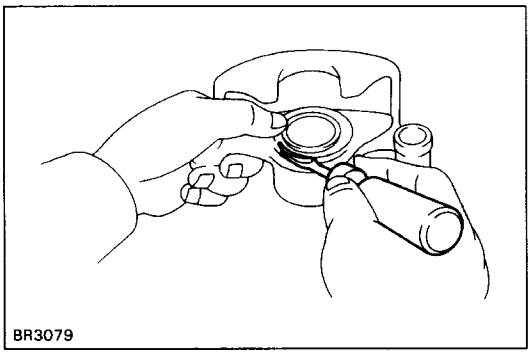

2. REMOVE CYLINDER BOOT SET RING AND CYLINDER BOOT
Using a screwdriver, remove the cylinder boot set ring and cylinder boot.

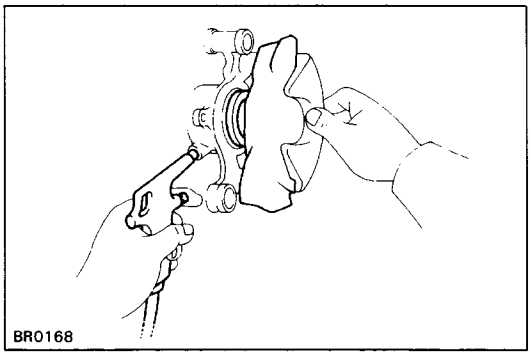

3. REMOVE PISTON FROM CYLINDER
(a) Put a piece of cloth or an equivalent between the piston and cylinder.
(b) Use compressed air to remove the piston from the cylinder.
NOTICE: Do not place your fingers in front of the piston when using compressed air.

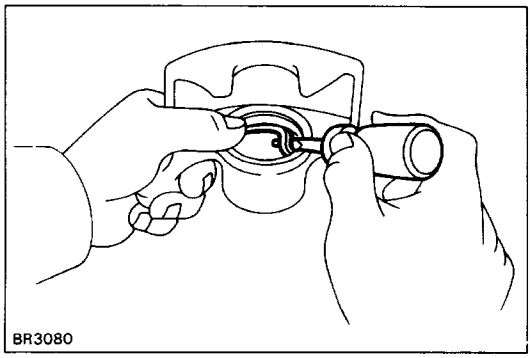

4. REMOVE PISTON SEAL FROM BRAKE CYLINDER
Using a screwdriver, remove the piston seal.

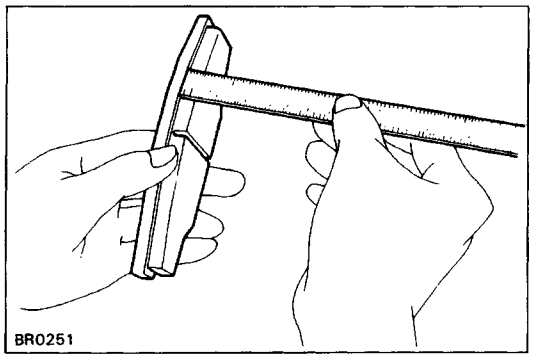

INSPECTION OF FRONT BRAKE COMPONENTS

1. MEASURE PAD LINING THICKNESS

Standard thickness:

PD60 Type 9.5 mm (0.374 in.)

PD66 Type 9.7 mm (0.382 in.)

Minimum thickness: 1.0 mm (0.039 in.)

Replace the pad if the thickness is less than the minimum (the 1.0 mm slite is no longer visible), or if it shows sign of uneven wear.

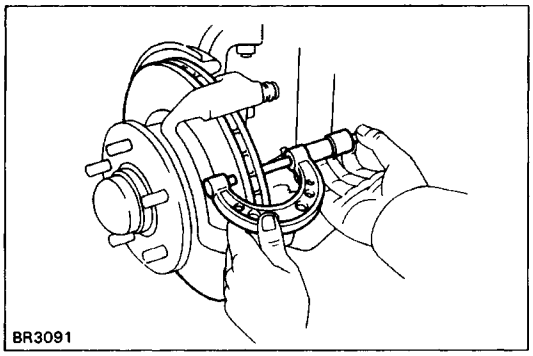

2. MEASURE ROTOR DISC THICKNESS

Standard thickness:

PD60 Type 25.0 mm (0.984 in.)

PD66 Type 30.0 mm (1.181 in.)

Minimum thickness:

PD60 Type 23.0 mm (0.906 in.)

PD66 Type 28.0 mm (1.102 in.)

If the disc is scored or worn, or if thickness is less than minimum, repair or replace the disc.

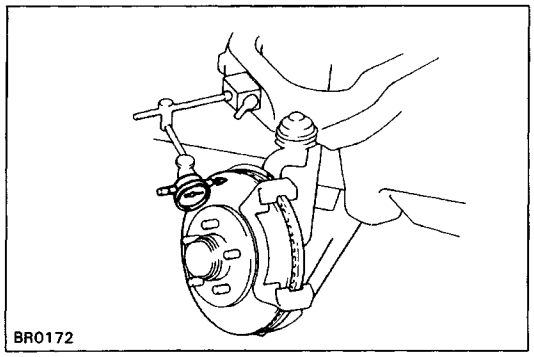

3. MEASURE ROTOR DISC RUNOUT

HINT: Before measuring the runout, confirm that the front hub bearing play is within specification.

Measure the rotor disc runout at 10 mm (0.39 in.) from the outer edge of the rotor disc.

Maximum disc runout:

PD60 Type 0.09 mm (0.0035 in.)

PD66 Type 0.12 mm (0.0047 in.)

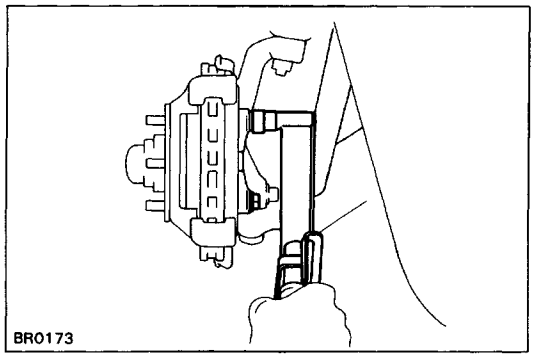

4. IF NECESSARY, REPLACE ROTOR DISC

(a) Remove the torque plate from the knuckle.

(b) Remove the axle hub. (See page SA–15)

(c) Remove the disc from the axle hub.

(d) Install a new rotor disc. Torque the bolts.

Torque: 64 N–m (650 kgf–cm, 47 ft–lbf)

(e) Install the axle hub and adjust the front bearing preload. (See page SA–16)

(f) Install the torque plate onto the knuckle.

Torque: 108 N–m (1,100 kgf–cm, 80 ft–lbf)

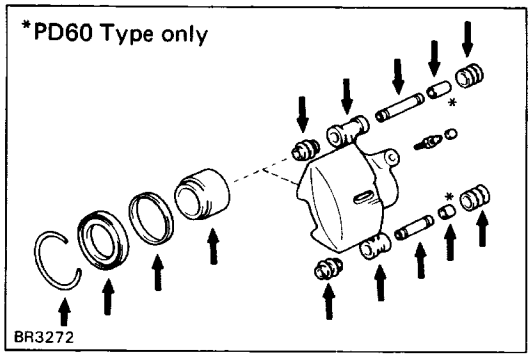

ASSEMBLY OF CYLINDER
(See page BR–18)
1. APPLY LITHIUM SOAP BASE GLYCOL GREASE TO PARTS INDICATED WITH ARROWS

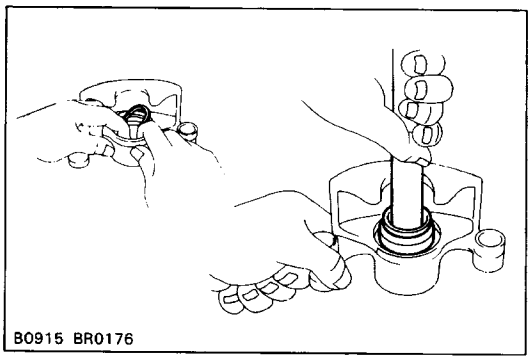

2. INSTALL PISTON SEAL AND PISTON IN CYLINDER

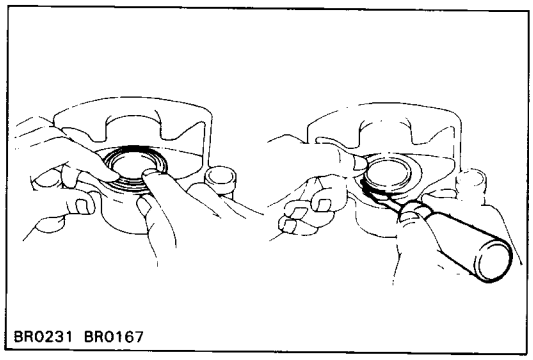

3. INSTALL CYLINDER BOOT AND SET RING IN CYLINDER

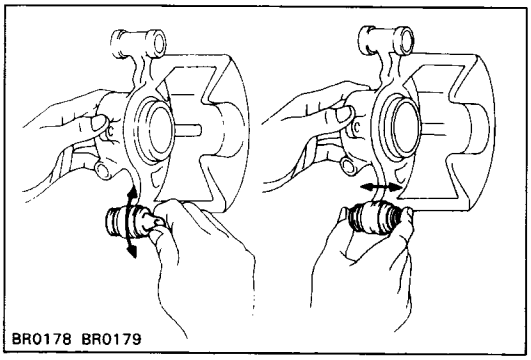

4. (PD60 TYPE)
INSTALL COLLAR, DUST BOOTS AND CYLINDER SLIDING BUSHINGS
(a) Install the collar and dust boots into the brake cylinder.
(b) Insure that the boots is secured firmly to the brake cylinder grooves.
(e) Install the bushing into the boots.
(d) Insure that the boots is secured firmly to the bush–ing grooves.

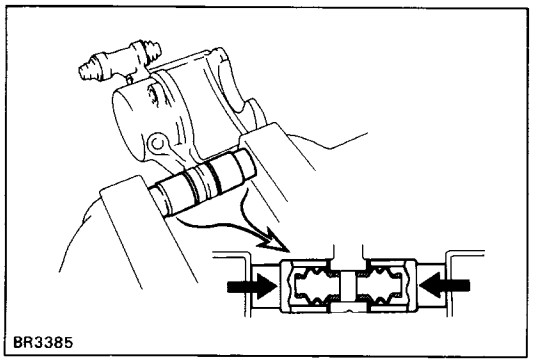

(PD66 TYPE)
INSTALL DUST BOOTS AND CYLINDER SLIDING BUSHINGS
(a) Using two socket wrenches and a vise, press in new dust boots.
(b) Install the bushing into the boots.
(c) Insure that the boots is secured firmly to the bush–ing grooves.

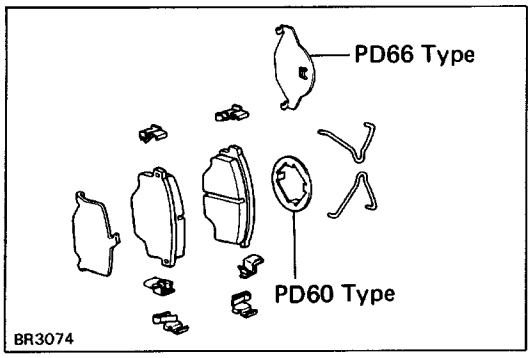

INSTALLATION OF CYLINDER
(See page BR–18)
1. INSTALL PADS
(See steps 7 to 8 on pages BR–19 and 20)

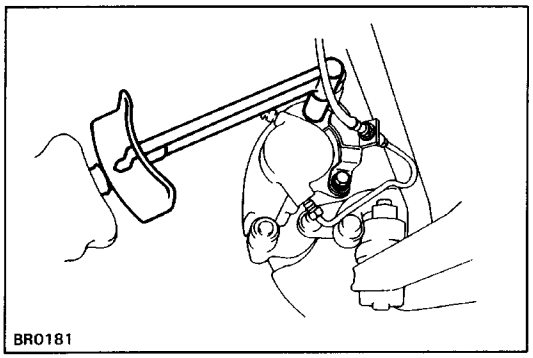

2. INSTALL CYLINDER
(a) Insert the brake cylinder.
(b) Install and torque the two installation bolts.
Torque: 39 N–m (400 kgf –cm, 29 ft–lbf)

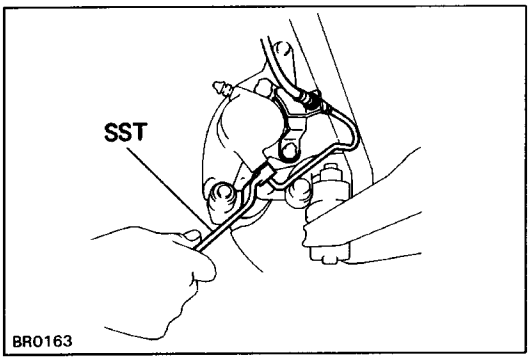

3. INSTALL BRAKE TUBE TO BRAKE CYLINDER
(a) Install the bracket to the cylinder.
Torque: 18 N–m (185 kgf–cm, 13 ft–lbf)
(b) Using SST, connect the brake tube to the cylinder.
SST 09751–36011
Torque: 15 N–m (155 kgf–cm, 11 ft–lbf)

4. FILL BRAKE RESERVOIR WITH BRAKE FLUID AND BLEED BRAKE SYSTEM
(See page BR–8)

5. CHECK FOR FLUID LEAKAGE

FRONT BRAKE
2WD (FS17 18 Type Disc)
COMPONENTS

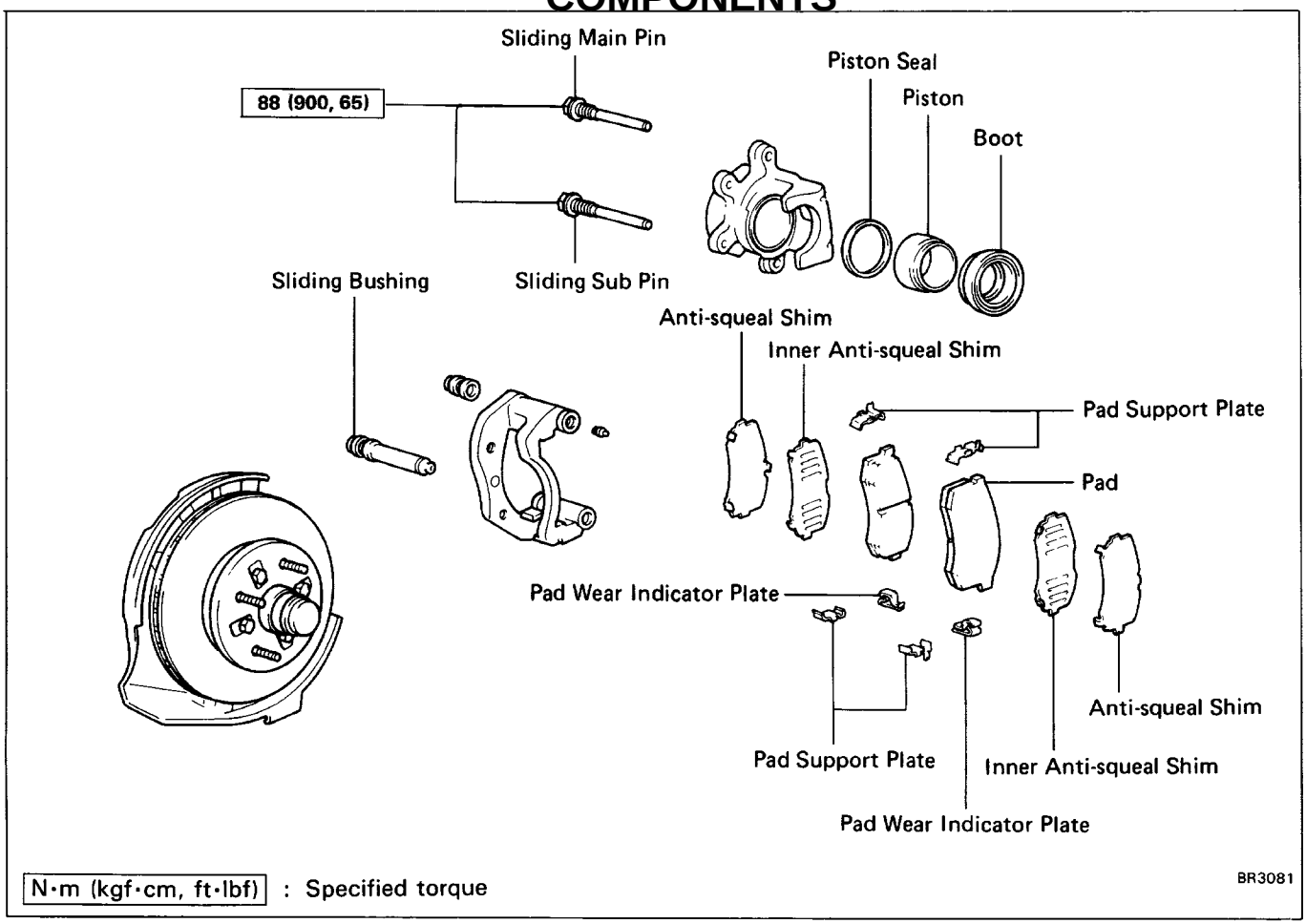

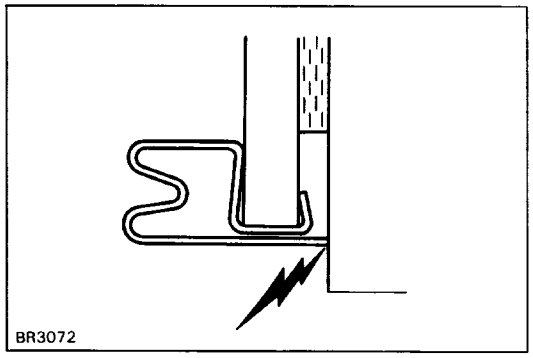

REPLACEMENT OF BRAKE PADS

HINT: If a squealing noise occurs from the front brakes while driving, check the pad wear indicator. If there are traces of the indicator contacting the rotor disc, the brake pad should be replaced.

1. REMOVE FRONT WHEEL

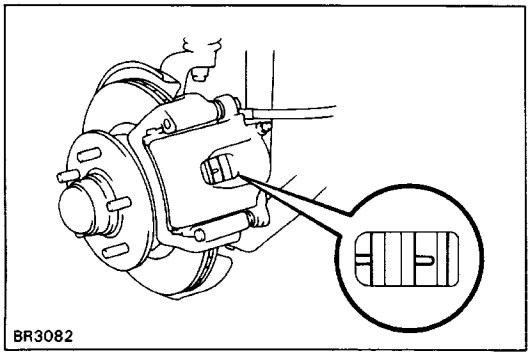

2. INSPECT PAD LINING THICKNESS

Check the pad thickness through the cylinder inspection hole and replace pads if not within specification.
Minimum thickness: 1.0 mm (0.039 in.)

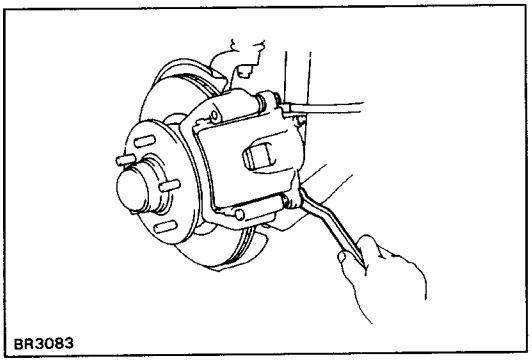

3. LIFT UP CYLINDER

(a) Remove the sliding sub pin from the torque plate.

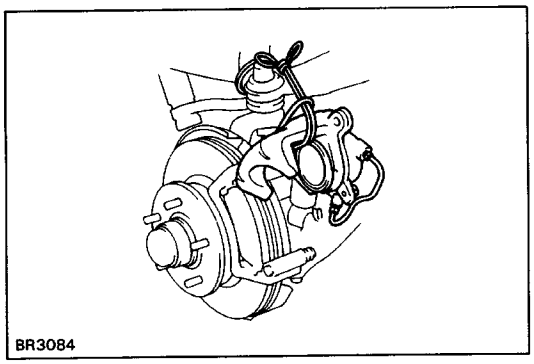

(b) Lift up the brake cylinder and suspend it so the hose is not stretched.
HINT: Do not disconnect the brake hose.

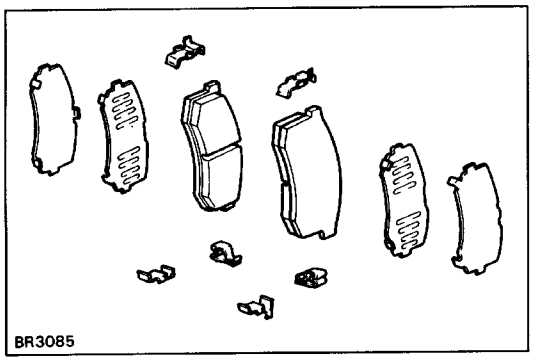

4. REMOVE FOLLOWING PARTS:

(a) Two brake pads
(b) Four anti–squeal shims
(c) Two pad wear indicator plates
(d) Four pad support plates

5. CHECK ROTOR DISC THICKNESS

(See step 2 on page BR–30)

6. CHECK ROTOR DISC RUNOUT

(See step 3 on page BR–30)

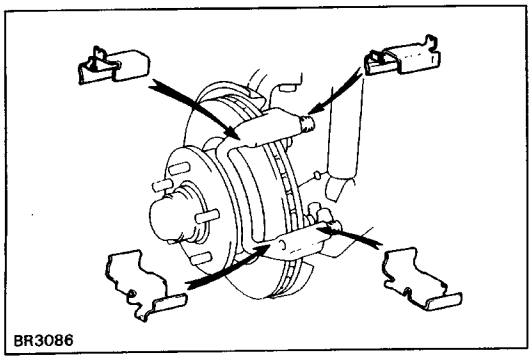

7. INSTALL PAD SUPPORT PLATES

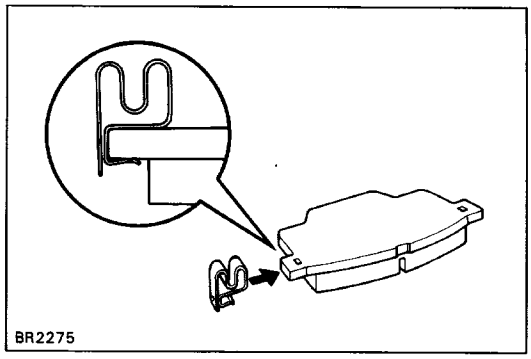

8. INSTALL NEW PADS

(a) Install a pad wear indicator plate to the pad.

(b) Install the two anti–squeal shims to the each pad.

HINT: Apply disc brake grease to both side of the inner anti–squeal shim.

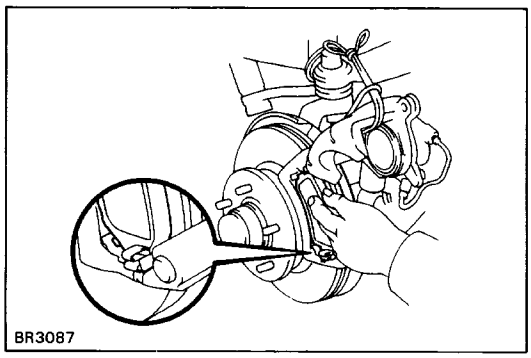

(C) Install the two pads so the wear indicator plate is facing underneath.

NOTICE: Do not allow oil or grease to get on the rub–bing face.

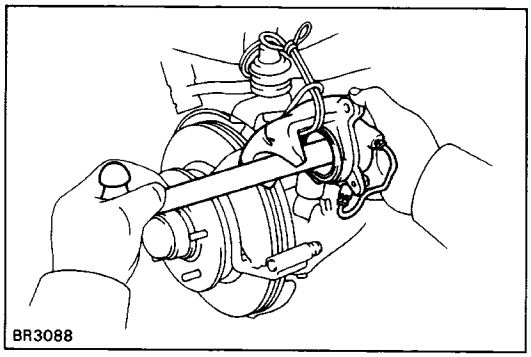

9. INSTALL CYLINDER

(a) Draw out a small amount of brake fluid from the res–ervoir.

(b) Press in piston with a hammer handle or an equiva–lent.

HINT: Always change the pad on one wheel at a time as there is a possibility of the opposite piston flying out.

(c) Insert the brake cylinder carefully so the boot is not wedged.

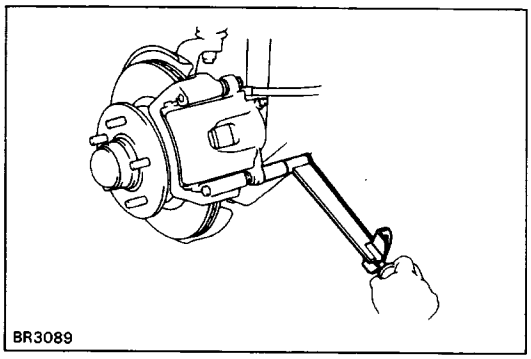

(d) Install and torque the sliding sub pin.

Torque: 88 N–m (900 kgf–cm, 65 ft–lbf)

10. INSTALL FRONT WHEEL

11. CHECK THAT FLUID LEVEL IS MAX LINE

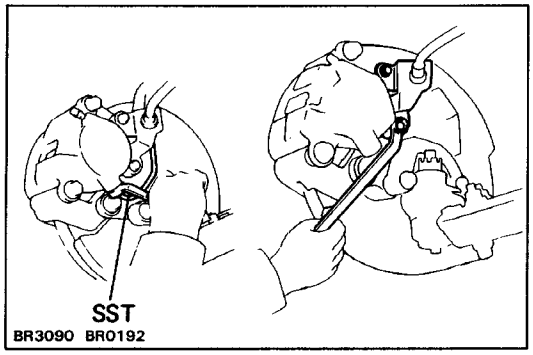

REMOVAL OF CYLINDER

(See page BR–26)

1. DISCONNECT BRAKE TUBE

(a) Using SST, disconnect the brake tube. Use a con–tainer to catch the brake fluid.
SST 09751–36011

(b) Remove the bracket from the cylinder.

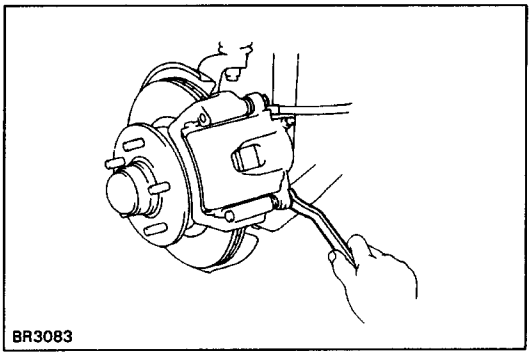

2. REMOVE CYLINDER FROM TORQUE PLATE

(a) Remove the sliding main pin and sliding sub pin.

(b) Remove the cylinder.

3. REMOVE PADS

(See step 4 on page BR–27)

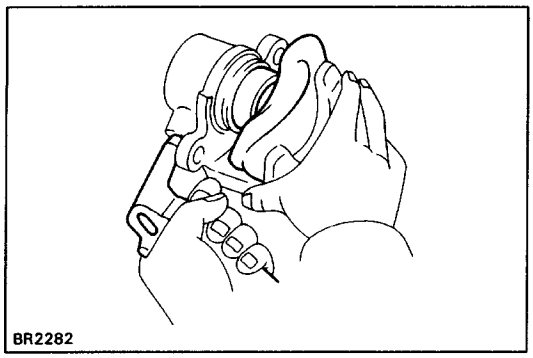

DISASSEMBLY OF CYLINDER

(See page BR–26)

1. REMOVE PISTON FROM CYLINDER

(a) Put a piece of cloth or an equivalent between the piston and cylinder.

(b) Use compressed air to remove the piston and cylin–der boot from the cylinder.

CAUTION: Do not place your fingers in front of the pis–ton when using compressed air.

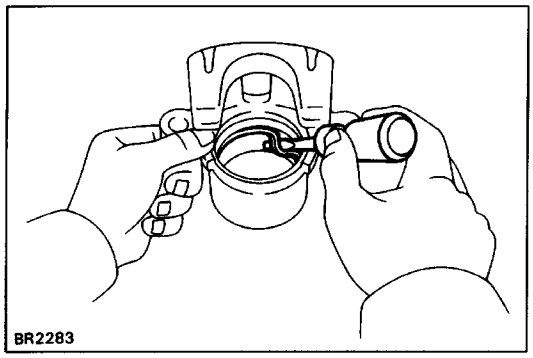

2. REMOVE PISTON SEAL FROM BRAKE CYLINDER

Using a screwdriver, remove the piston seal.

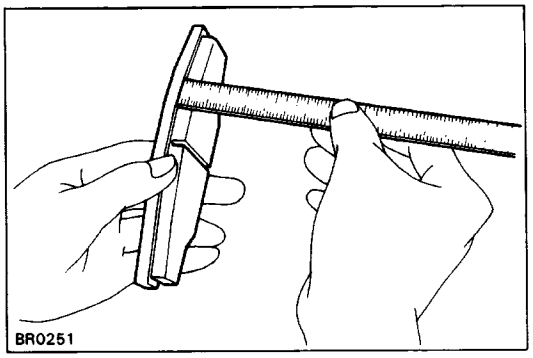

INSPECTION OF FRONT BRAKE COMPONENTS

1. MEASURE PAD LINING THICKNESS

Standard thickness:
FS 17 Type 9.5 mm (0.374 in.)
FS18 Type 10.0 mm (0.394 in.)
Minimum thickness: 1.0 mm (0.039 in.)
Replace the pad if the thickness is less than the minimum (the 1.0 mm slit is no longer visible), or if it shows sign of uneven wear.

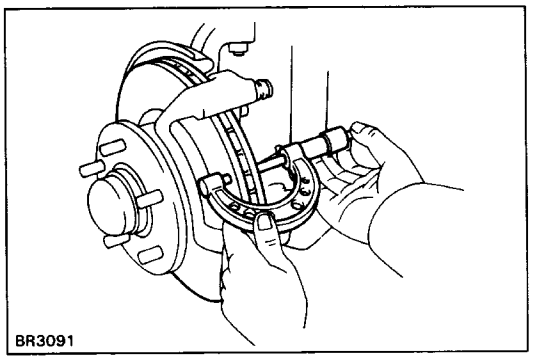

2. MEASURE ROTOR DISC THICKNESS

Standard thickness: 22.0 mm (0.866 in.)
Minimum thickness: 20.0 mm (0.787 in.)
If the disc is scored or worn, or if thickness is less than minimum, repair or replace the disc.

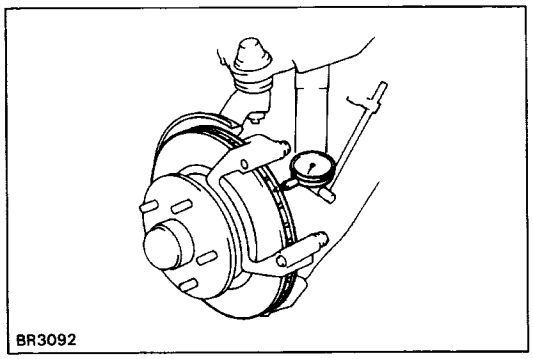

3. MEASURE ROTOR DISC RUNOUT

HINT: Before measuring the runout, confirm that the front hub bearing play is within specification.
Measure the rotor disc runout at 10 mm (0.39 in.) from the outer edge of the rotor disc.
Maximum disc runout: 0.09 mm (0.0035 in.)

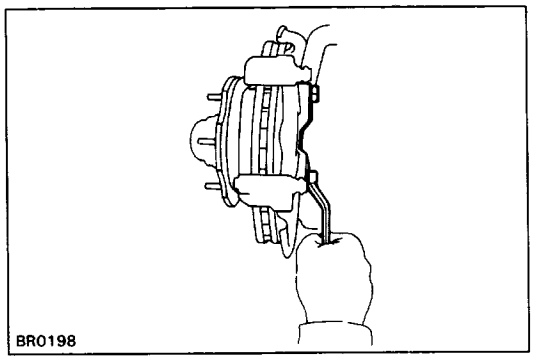

4. IF NECESSARY, REPLACE ROTOR DISC

(a) Remove the torque plate from the knuckle.
(b) Remove the axle hub. (See page SA–15)
(c) Remove the disc from the axle hub.
(d) Install a new rotor disc. Torque the bolts.
Torque: 64 N–m (650 kgf–cm, 47 ft–lbf)
(e) Install the axle hub and adjust the front bearing pre. load. (See page SA–16)
(f) Install the torque plate onto the knuckle.
Torque: 108 N*m (1,100 kgf –cm, 80 ft–lbf)

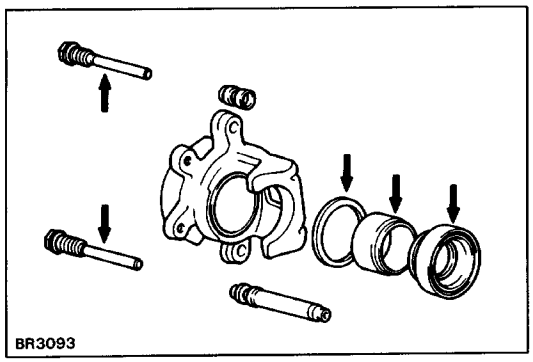

ASSEMBLY OF CYLINDER

(See page BR–26)

1. APPLY LITHIUM SOAP BASE GLYCOL GREASE TO PARTS INDICATED WITH ARROWS

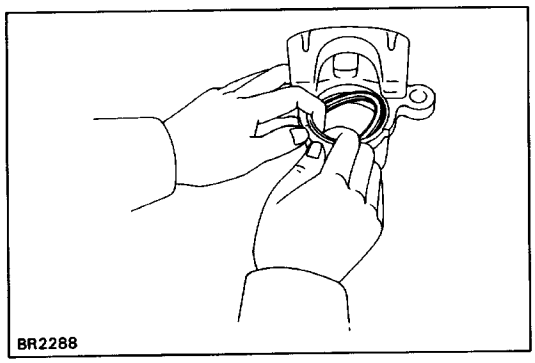

2. INSTALL PISTON SEAL IN CYLINDER

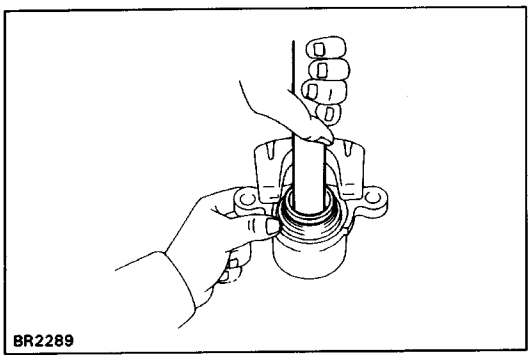

3. INSTALL PISTON AND CYLINDER BOOT IN CYLINDER

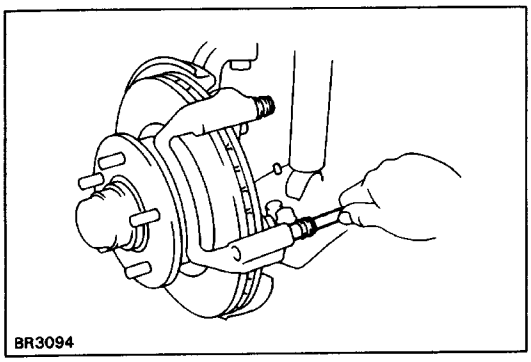

4. INSTALL PIN BOOT AND CYLINDER SLIDING BUSHING

(a) Install the pin boot into the sliding sub pin side.

(b) Using a plastic bar, install the cylinder sliding bush–ing into the sliding sub pin side.

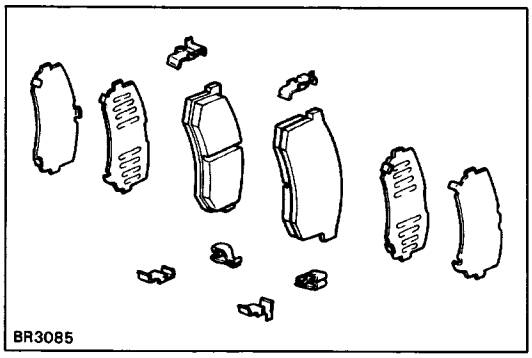

INSTALLATION OF CYLINDER
(See page BR–26)
1. INSTALL PADS
(See steps 7 to 8 on pages BR–27 and 28)

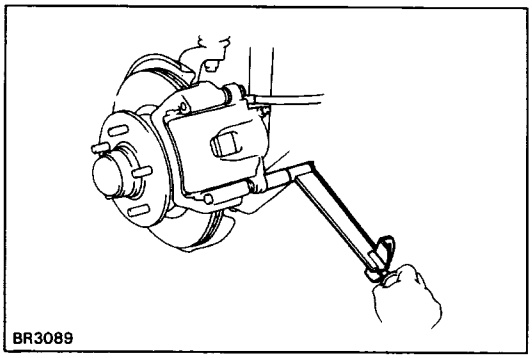

2. INSTALL CYLINDER
(a) Insert the brake cylinder.
(b) Install and torque the two sliding pins.
Torque: 88 N–m (900 kgf–cm, 65 ft–lbf)

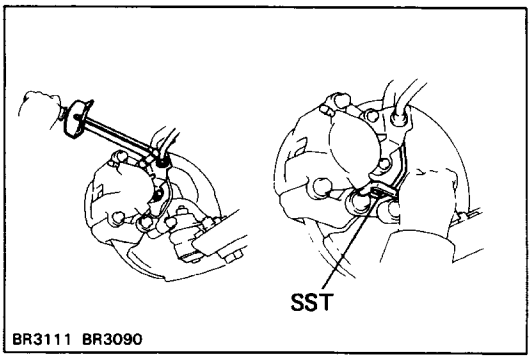

3. CONNECT BRAKE TUBE
(a) Install the bracket to the cylinder.
Torque: 18 N–m (185 kgf –cm, 13 ft–lbf)
(b) Using SST, connect the brake tube to the cylinder.
SST 09751–36011
Torque: 15 N–m (155 kgf –cm, 11 ft–lbf)

4. FILL BRAKE RESERVOIR WITH BRAKE FLUID AND BLEED BRAKE SYSTEM
(See page BR–8)

5. CHECK FOR FLUID LEAKAGE

FRONT BRAKE
4WD (S12 + 12 Type Disc)
COMPONENTS

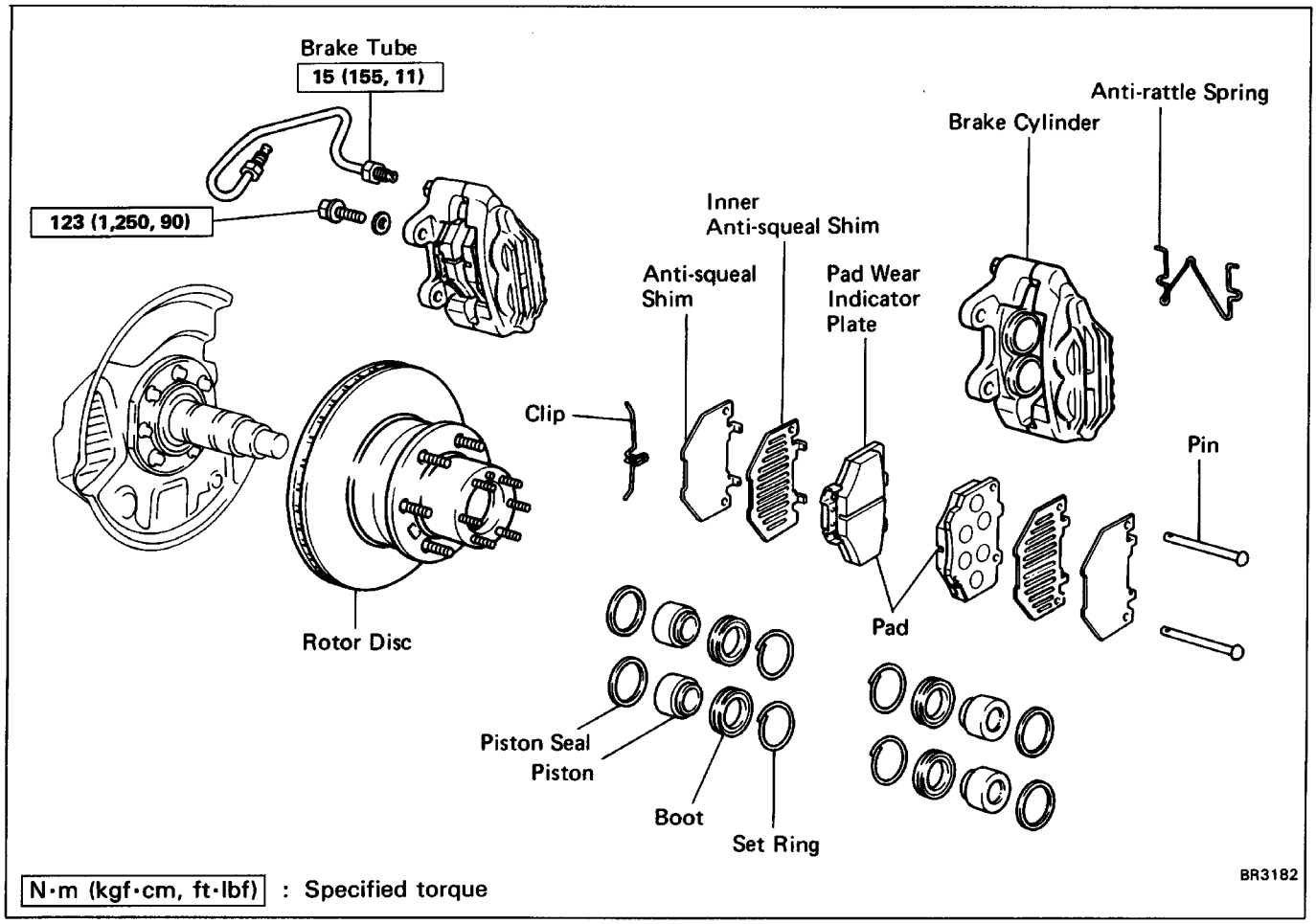

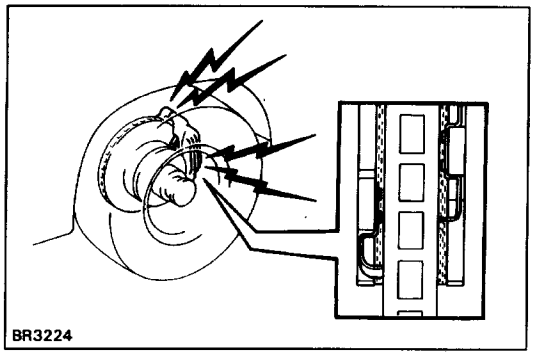

REPLACEMENT OF BRAKE PADS

HINT: If a squealing noise occurs from the brakes while driving, check the pad wear indicator plate. If the pad wear indicator plate contacts the rotor disc, the brake pads should be replaced.

1. REMOVE FRONT WHEEL

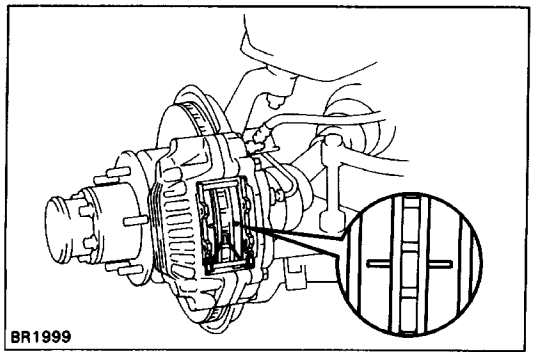

2. INSPECT PAD LINING THICKNESS

Check the pad thickness and replace pads if not within specification.

Minimum thickness: 1.0 mm (0.039 in.)

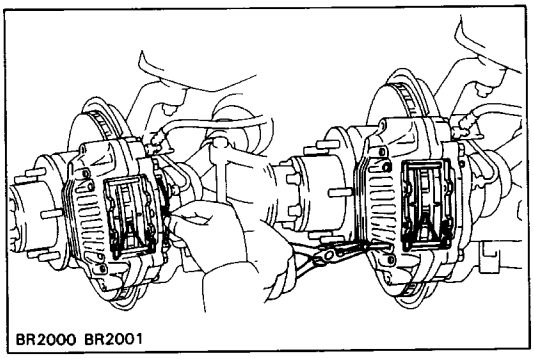

3. REMOVE FOLLOWING PARTS

(a) Clip
(b) Two pins
(c) Anti–rattle spring
(d) Two pads
(e) Four anti–squeal shims

4. CHECK ROTOR DISC THICKNESS

(See step 2 on page BR–37)

5. CHECK ROTOR DISC RUNOUT

(See step 3 on page BR–37)

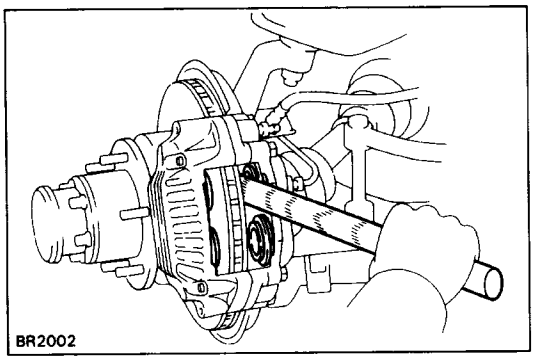

6. INSTALL NEW PADS

(a) Draw out a small amount of brake fluid from the res–ervoir.
(b) Press in the pistons with a hammer handle or ar equivalent.
HINT: Always change the pads on one wheel at a time as there is possibility of the opposite piston flying out.

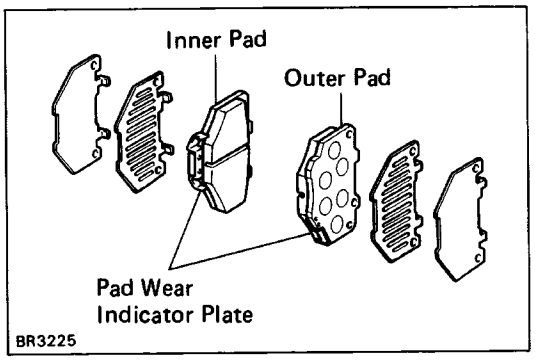

(c) Install the four anti–squeal shims to new pads a: shown.
HINT: Apply disc brake grease to both sides of the inner anti–squeal shims.
(d) Install the two pads as shown in the illustration.
NOTICE: Do not allow oil or grease to get on the rub bing face.

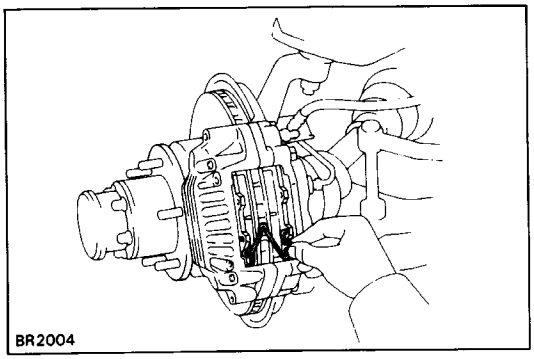

7. INSTALL ANTI–RATTLE SPRING

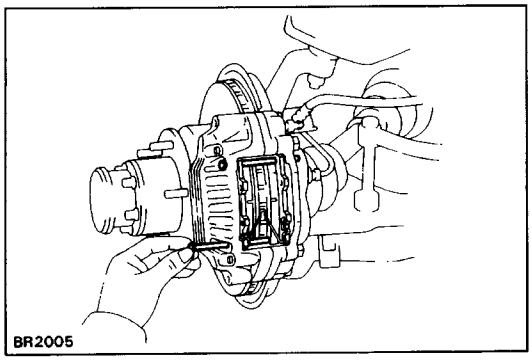

8. INSTALL TWO PINS

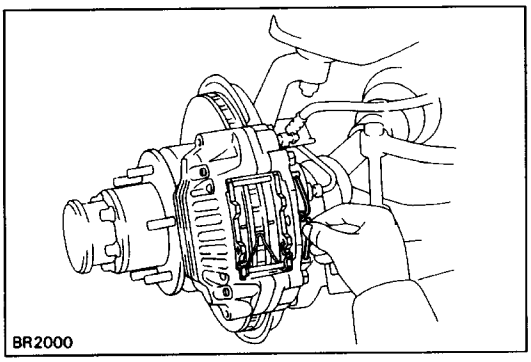

9. INSTALL CLIP

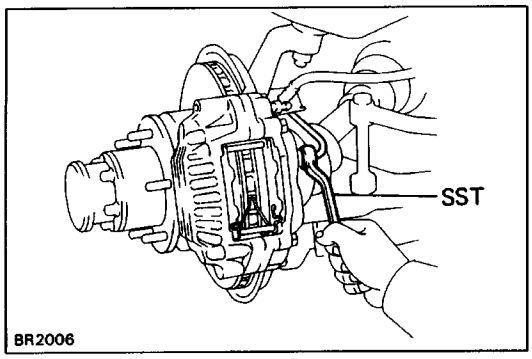

REMOVAL OF CYLINDER

(See page BR–33)

1. REMOVE FRONT WHEEL

2. DISCONNECT BRAKE TUBE

Using SST, disconnect the brake tube.
Use a container to catch the brake fluid.
SST 09751–36011

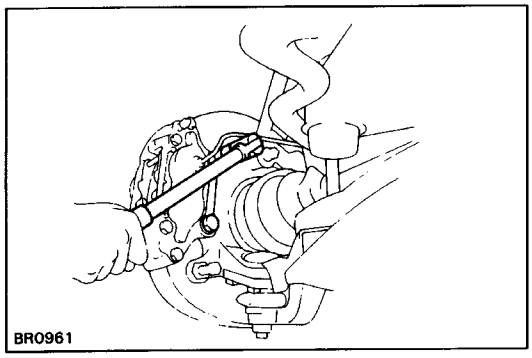

3. REMOVE CYLINDER

Remove the two mounting bolts and remove the cylinder.

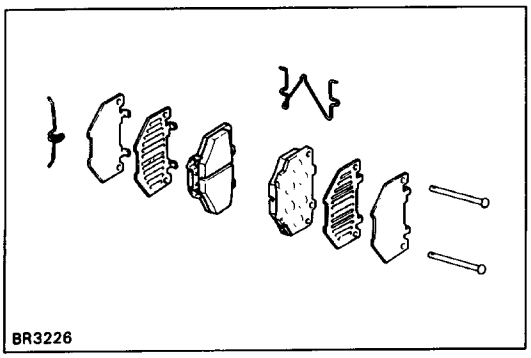

4. REMOVE FOLLOWING PARTS:

(a) Clip
(b) Two pins
(c) Anti–rattle spring
(d) Two pads
(e) Four anti–squeal shims

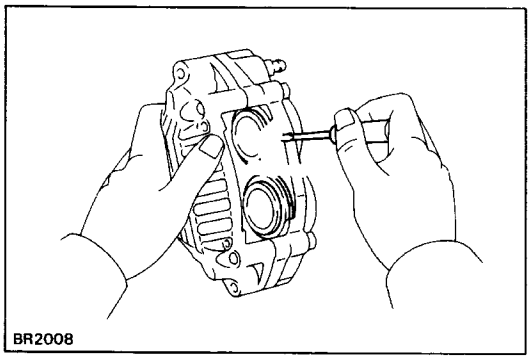

DISASSEMBLY OF CYLINDER

(See page BR–33)

1. REMOVE CYLINDER BOOT SET RINGS AND BOOTS

Using a screwdriver, remove the four cylinder boot set rings and four boots.

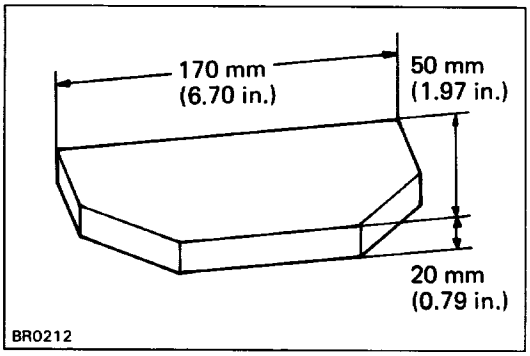

2. REMOVE PISTONS FROM CYLINDER

(a) Prepare the wooden plate as shown in the illustration to hold the pistons.

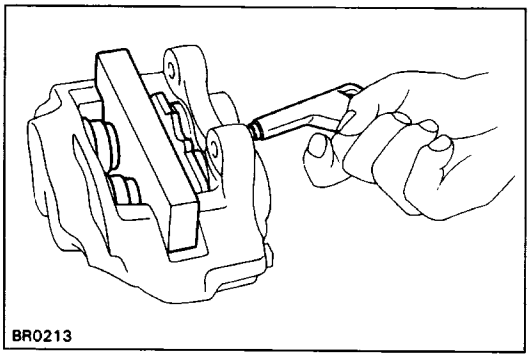

(b) Place the plate between the pistons and insert a pad at one side.

(c) Use compressed air to remove the pistons alternately from the cylinder.

NOTICE: Do not place your fingers in front of the pistons when using compressed air.

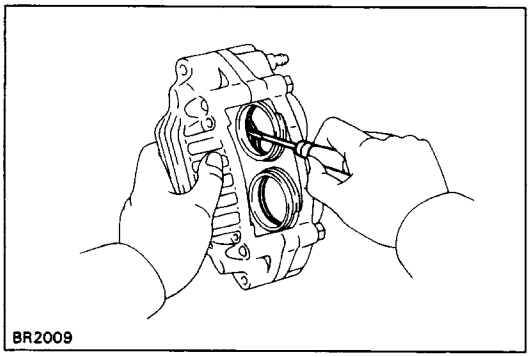

3. REMOVE PISTON SEALS

Using a screwdriver, remove the four seals from the cylinder.

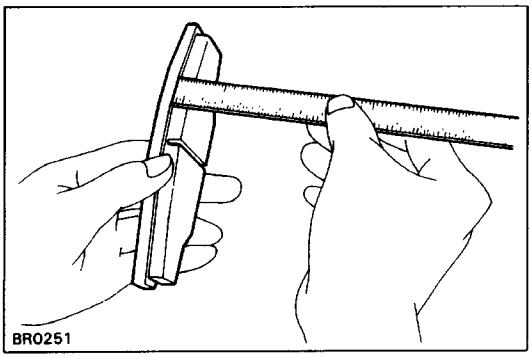

INSPECTION AND REPAIR OF FRONT BRAKE COMPONENTS

1. MEASURE PAD LINING THICKNESS

Standard thickness: 9.5 mm (0. 374 in.)

Minimum thickness: 1.5 mm (0.059 in.)

Replace the pads if the thickness is less than the mini–mum (the 1.5 mm slit is no longer visible) or if it shows sign of uneven wear.

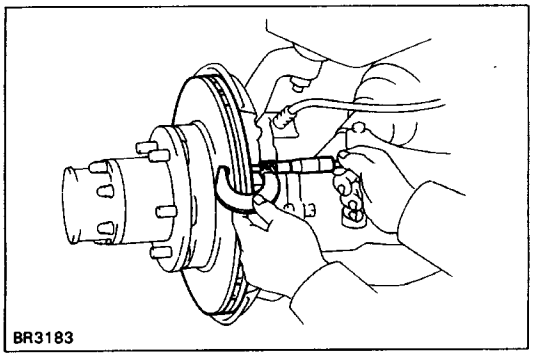

2. MEASURE ROTOR DISC THICKNESS

Standard thickness: 20.0 mm (0.787 in.)

Minimum thickness: 18.0 mm (0.709 in.)

If the disc is scored or worn, or if thickness is less than minimum, repair or replace the disc.

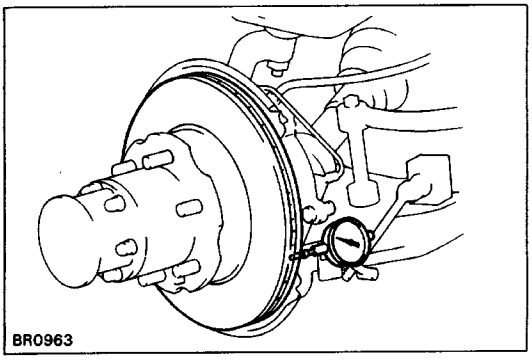

3. MEASURE ROTOR DISC RUNOUT

Measure the rotor disc runout at 10 mm (0.39 in.) from the outer edge of the rotor disc.

Maximum disc runout: 0.09 mm (0.0035 in.)

If the runout is greater than maximum, replace the rotor disc.

HINT: Before measuring the runout, confirm that the front bearing play is within specification.

4. IF NECESSARY, REPLACE ROTOR DISC

(a) Remove the front axle hub.

(b) Remove the disc from the axle hub.

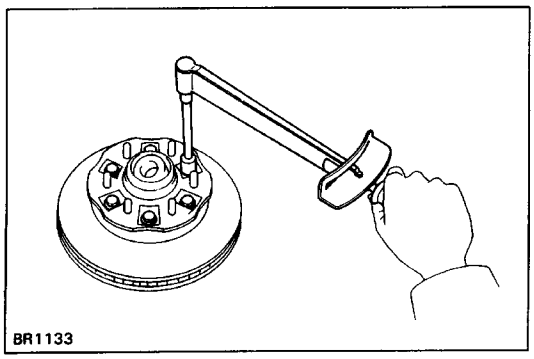

(c) Install a new rotor disc and torque the bolts.

Torque: 64 N–m (650 kgf–cm, 47 ft–lbf)

(d) Install the axle hub and adjust the front bearing pre–load.

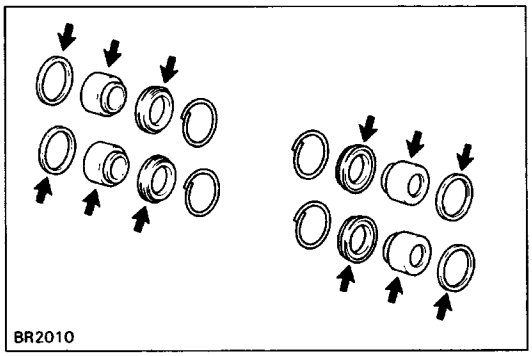

ASSEMBLY OF CYLINDER
(See page BR–33)

1. APPLY LITHIUM SOAP BASE GLYCOL GREASE TO PARTS INDICATED BY ARROWS

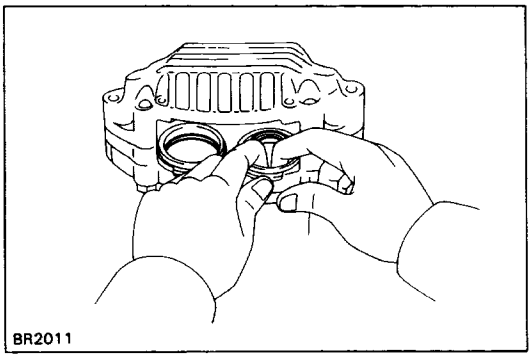

2. INSTALL PISTON SEALS INTO CYLINDER

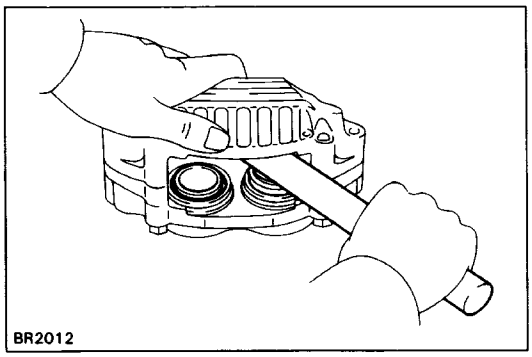

3. INSTALL PISTONS INTO CYLINDER

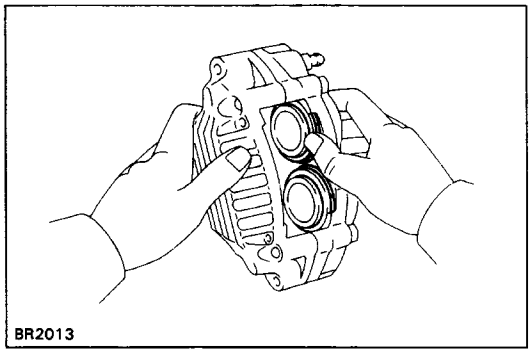

4. INSTALL CYLINDER BOOTS AND SET RINGS INTO CYLINDER

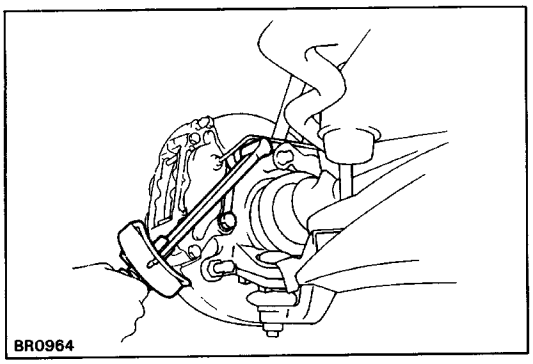

INSTALLATION OF CYLINDER
(See page BR–33)

1. INSTALL CYLINDER

Install the brake cylinder, and torque the two mounting bolts.

Torque: 123 N–m (1,250 kgf–cm, 90 ft–lbf)

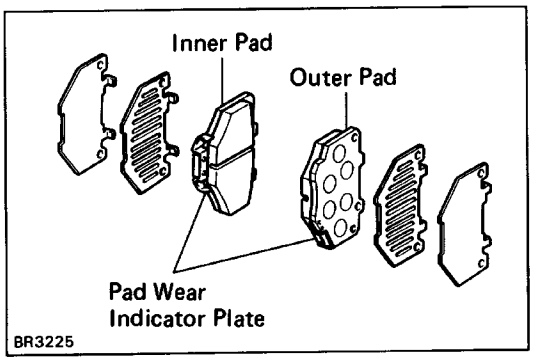

2. INSTALL PADS

(See steps 6 to 9 on pages BR–34 and 35)

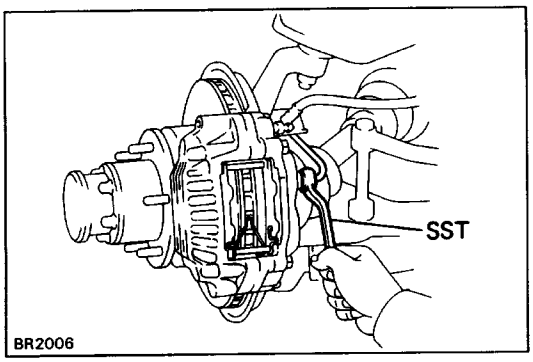

3. CONNECT BRAKE TUBE

Using SST, connect the brake tube.
SST 09751–36011

Torque: 15 N–m (155 kgf –cm, 11 ft–lbf)

4. FILL BRAKE RESERVOIR WITH BRAKE FLUID AND BLEED BRAKE SYSTEM
(See page BR–8)

5. CHECK FOR FLUID LEAKAGE

6. INSTALL FRONT WHEEL

REAR BRAKE
2WD (Leading–Trailing Type)
COMPONENTS

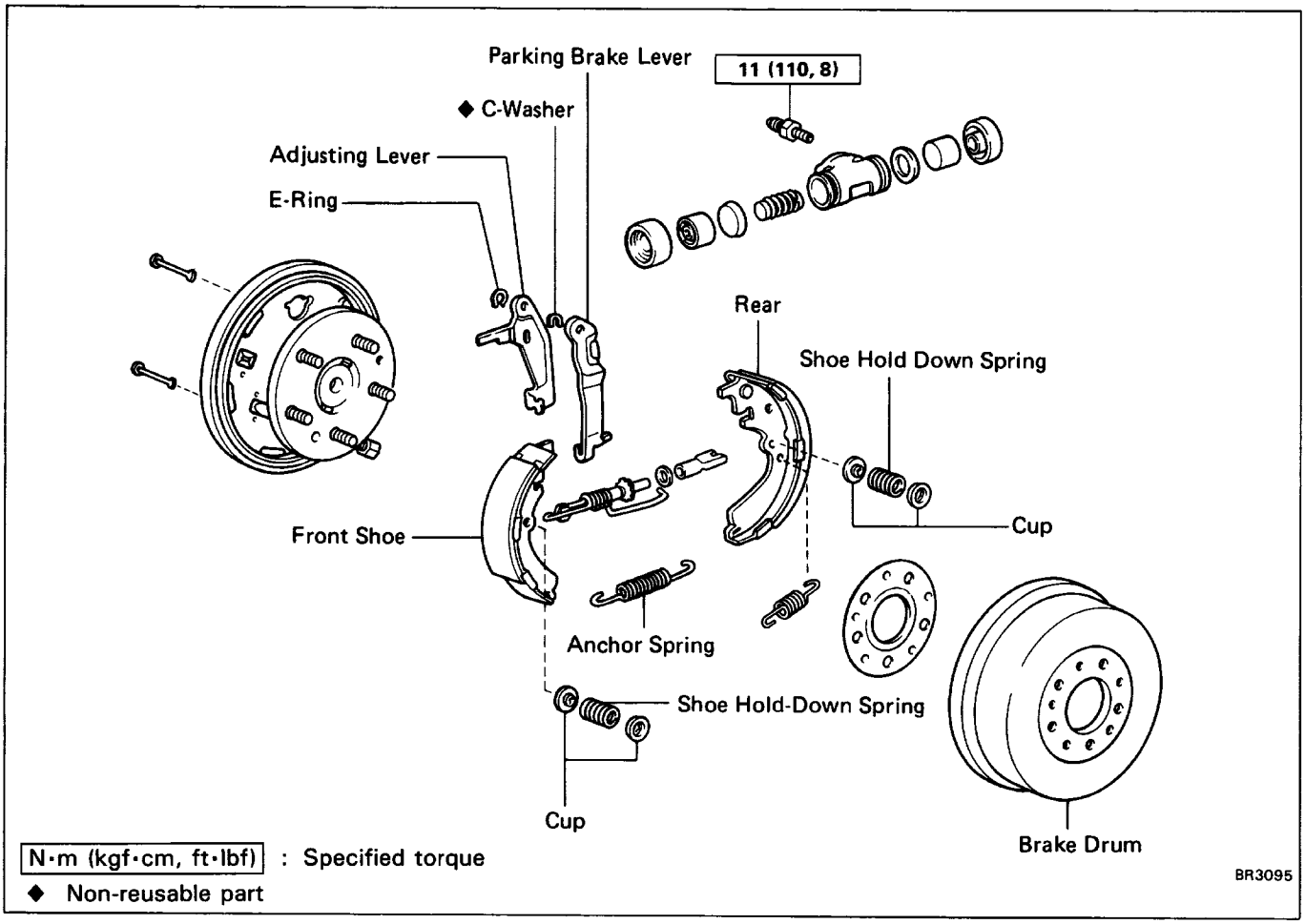

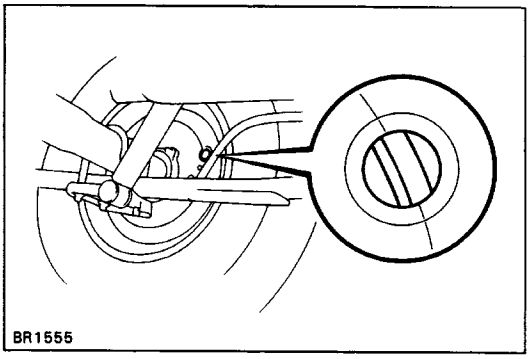

REMOVAL OF REAR BRAKE

1. INSPECT SHOE LINING THICKNESS

Remove the inspection hole plug, and check the shoe lining thickness through the hole.
If less than minimum, replace the shoes.
Minimum thickness: 1.0 mm (0.039 in.)

2. REMOVE REAR WHEEL

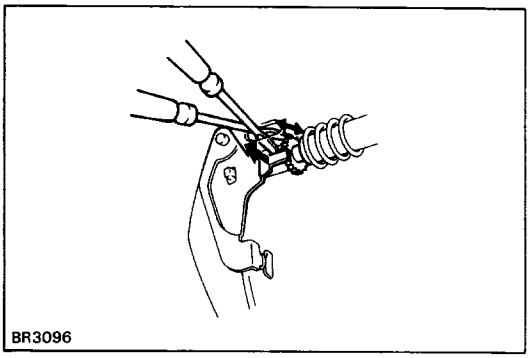

3. REMOVE BRAKE DRUM

HINT: If the brake drum cannot be easily removed, perform the following steps.

(a) Insert a screwdriver through the hole in the backing plate, and hold the automatic adjusting lever away from the adjusting bolt.

(b) Using another screwdriver, reduce the brake shoe adjustment by turning the adjusting bolt.

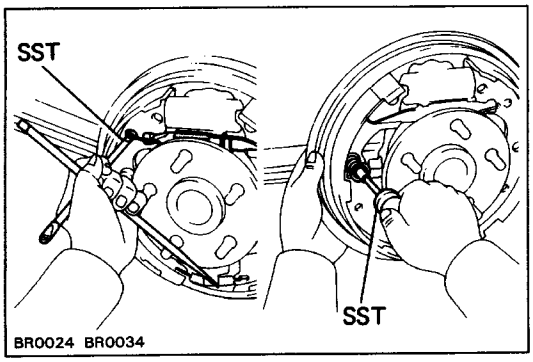

4. REMOVE FRONT SHOE

(a) Using SST, disconnect the return spring.
SST 09703–30010

(b) Using SST, remove the shoe hold–down spring, cups and pin.
SST 09718–00010

(c) Disconnect the anchor spring from the front shoe and remove the front shoe.

(d) Remove the anchor spring from the rear shoe.

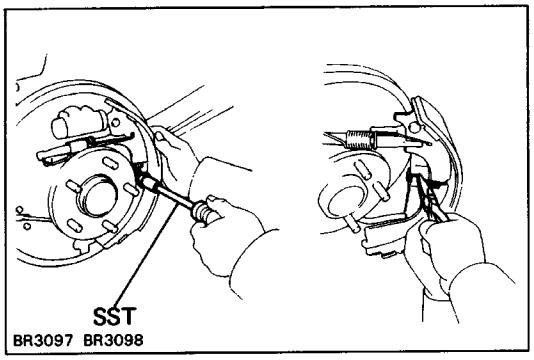

5. REMOVE ADJUSTER AND REAR SHOE

(a) Using SST, remove the shoe hold–down spring, cups and pin.
SST 09718–00010

(b) Remove the adjusting lever spring.

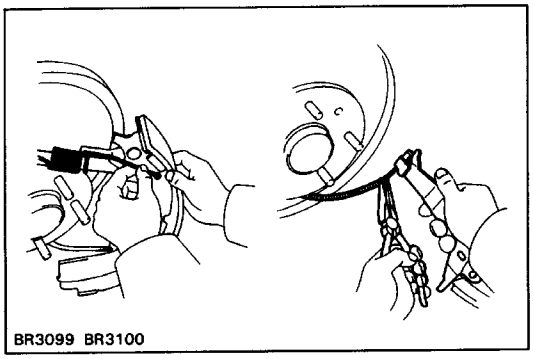

(c) Remove the adjuster together with the return spring.

(d) Using pliers, disconnect the parking brake cable from the lever and remove the rear shoe.

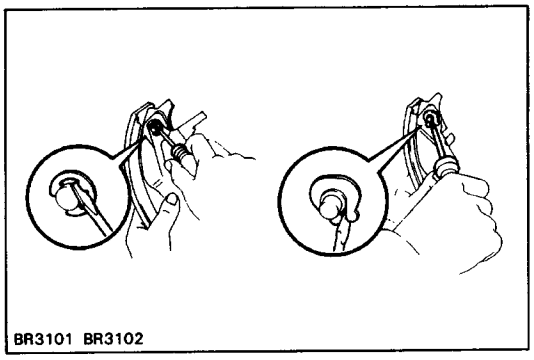

6. REMOVE AUTOMATIC ADJUSTING LEVER AND PARKING BRAKE LEVER

(a) Remove the E–ring.

(b) Remove the automatic adjusting lever.

(c) Remove the C–washer.

(d) Remove the parking brake lever.

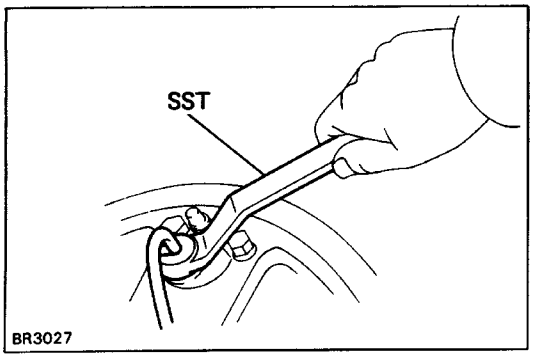

7. DISCONNECT BRAKE TUBE FROM WHEEL CYLINDER

Using SST, disconnect the brake tube. Use a container to catch the brake fluid.
SST 09751–36011

8. REMOVE WHEEL CYLINDER

Remove the two bolts and wheel cylinder.

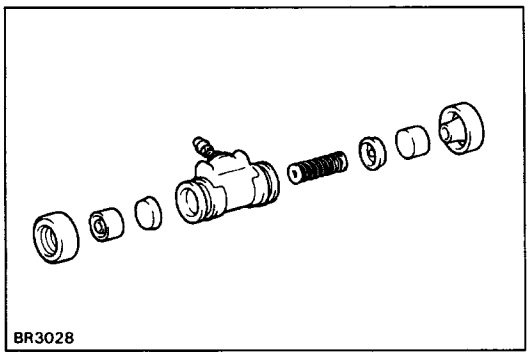

9. REMOVE FOLLOWING PARTS FROM WHEEL CYLINDER

(a) Two boots
(b) Two pistons
(c) Two piston cups
(d) Spring

INSPECTION AND REPAIR OF REAR BRAKE COMPONENTS

1. INSPECT DISASSEMBLED PARTS

Inspect the disassembled parts for wear, rust or damage.

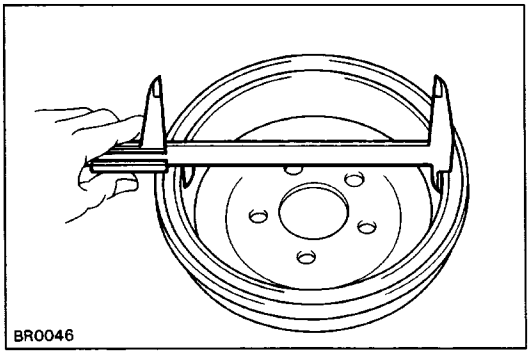

2. INSPECT BRAKE DRUM INSIDE DIAMETER

Standard inside diameter: 254.0 mm (10.00 in.)
Maximum inside diameter: 256.0 mm (10.08 in.)

If the drum is scored or worn, the brake drum may be lathed to the maximum inside diameter.

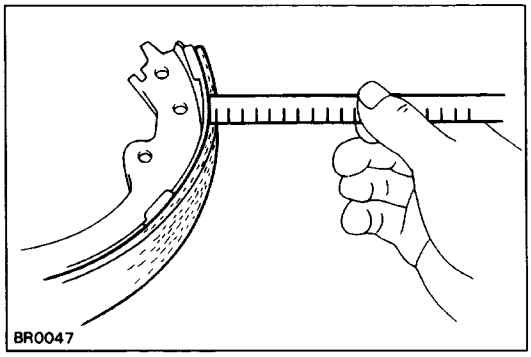

3. INSPECT BRAKE SHOE LINING THICKNESS

Standard thickness: 5.0 mm (0.197 in.)
Minimum thickness: 1.0 mm (0.039 in.)

If the shoe lining is less than minimum or shows signs of uneven wear, replace the brake shoes.
HINT: If any of the brake shoes have to be replaced, re–place all of the rear brake shoes in order to maintain even braking.

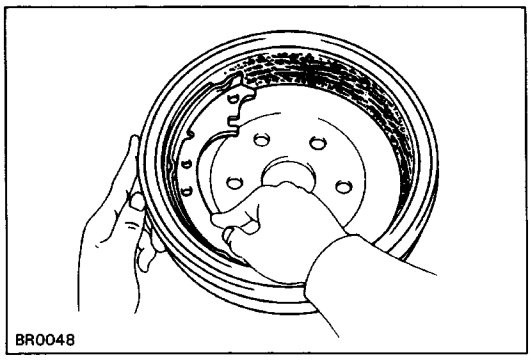

4. INSPECT BRAKE LINING AND DRUM FOR PROPER CONTACT

If the contact between the brake lining and drum is im–proper, repair the lining with a brake shoe grinder, or re–place the brake shoe assembly.

INSTALLATION OF REAR BRAKE

(See page BR–40)

HINT: Assemble the parts in the correct direction as shown.

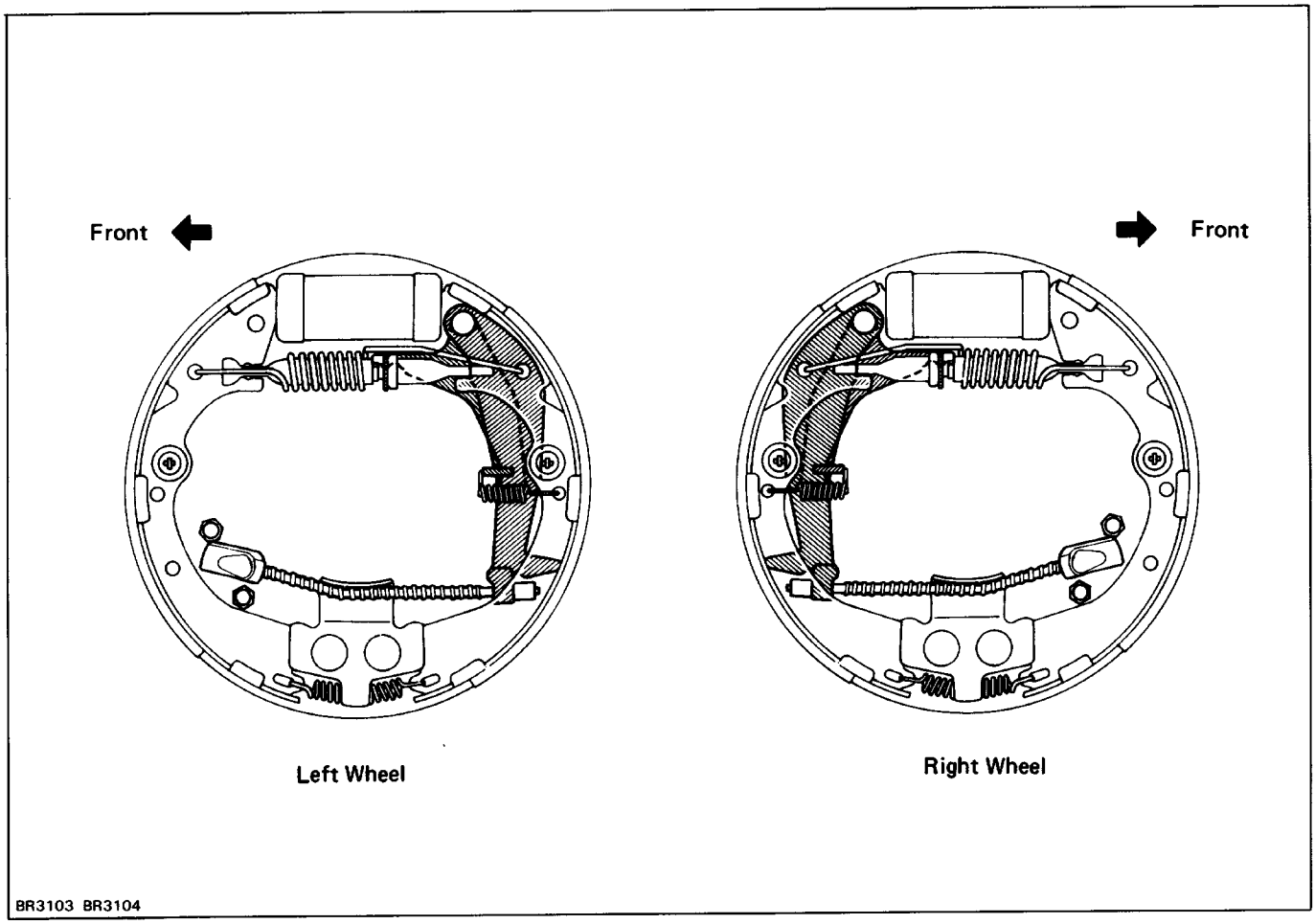

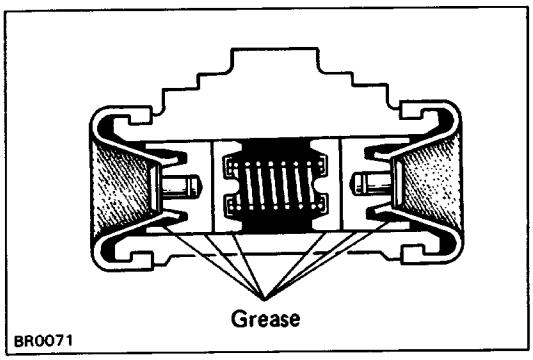

1. APPLY LITHIUM SOAP BASE GLYCOL GREASE TO FOLLOWING PARTS:

(a) Two piston cups
(b) Two pistons
(c) Two boots

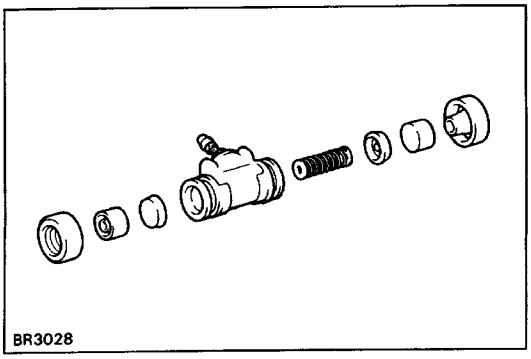

2. ASSEMBLE WHEEL CYLINDER

(a) Install the spring and two piston cups into the wheel cylinder. Check that the flanges of the piston cups are pointed inward.
(b) Install the two pistons.
(c) Install the two boots.

3. INSTALL WHEEL CYLINDER

Install the wheel cylinder on the backing plate with the two bolts.

Torque: 10 N–m (100 kgf–cm, 7 ft–lbf)

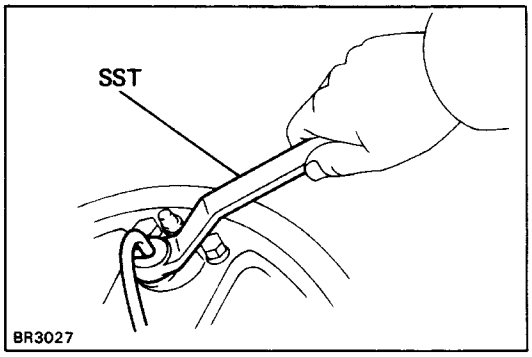

4. CONNECT BRAKE TUBE TO WHEEL CYLINDER

Using SST, connect the brake tube.
SST 09751–36011
Torque: 15 N–m (155 kgf –cm, 11 ft–lbf)

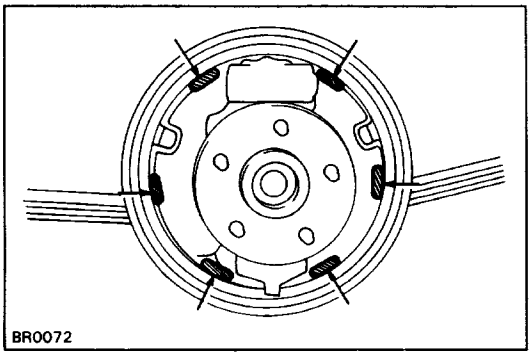

5. APPLY HIGH TEMPERATURE GREASE TO FOLLOWING PARTS:

(a) Backing plate and brake shoe contact points
(b) Anchor plate and brake shoe contact points

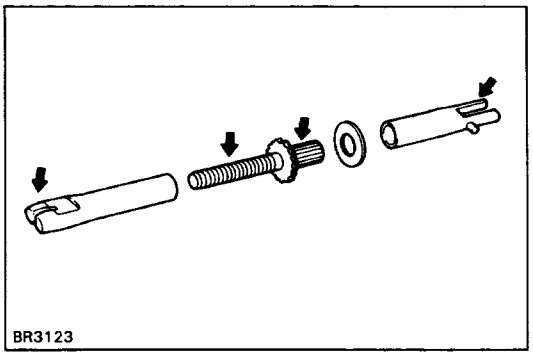

(c) Adjusting bolt
(d) Adjuster and brake shoe contact points

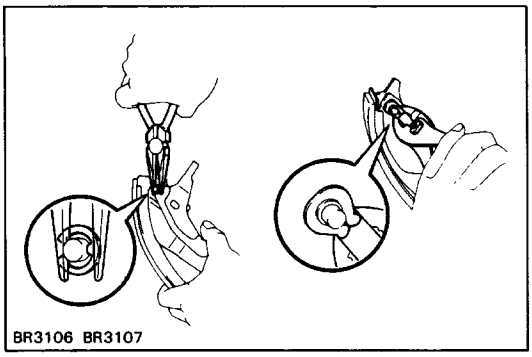

6. INSTALL PARKING BRAKE LEVER AND AUTOMATIC ADJUSTING LEVER

(a) Install the parking brake lever with a new C–washer.
(b) Install the automatic adjusting lever with the E–ring.

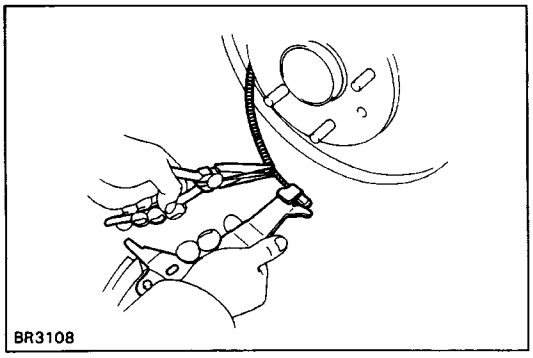

7. INSTALL ADJUSTER AND REAR SHOE

NOTICE: Do not allow oil or grease to get on the rubbing face.

(a) Using pliers, connect the parking brake cable to the lever.

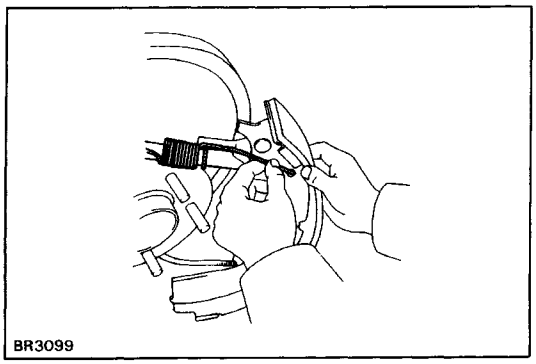

(b) Set the adjuster and return spring.

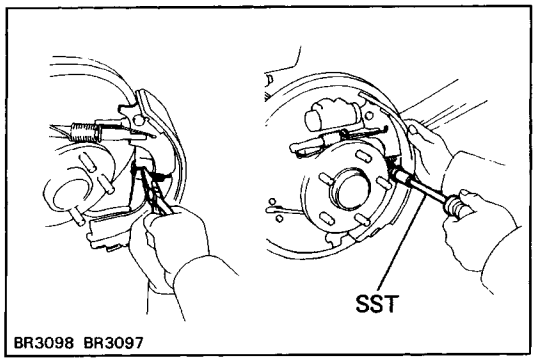

(c) Install the adjusting lever spring.
(d) Set the rear shoe in place with the end of the shoe inserted in the wheel cylinder and the other end in the anchor plate.
(e) Using SST, install the shoe hold–down spring, cups and pin.
SST 09718–00010

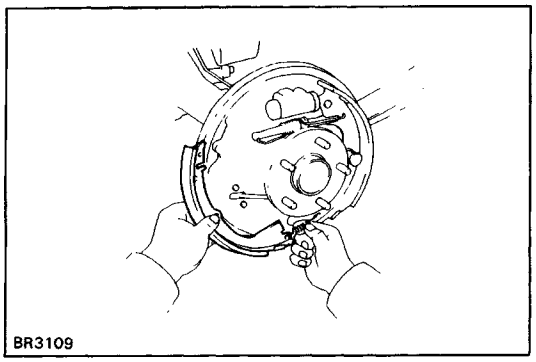

8. INSTALL FRONT SHOE

NOTICE: Do not allow oil or grease to get on the rub–bing face.

(a) Install the anchor spring between the front and rear shoes.
(b) Set the front shoe in place with the end of the shoe inserted in the wheel cylinder and the ad–juster in place.

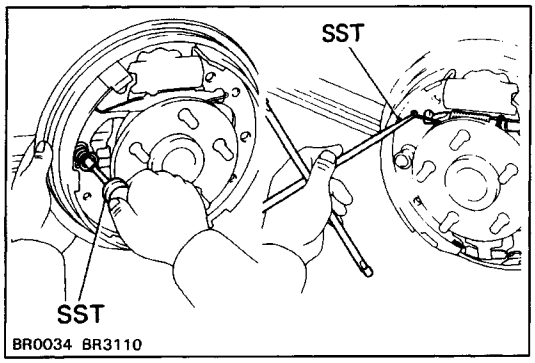

(c) Using SST, install the shoe hold–down spring, cups and pin.
SST 09718–00010
(d) Using SST, connect the return spring.
SST 09703–30010

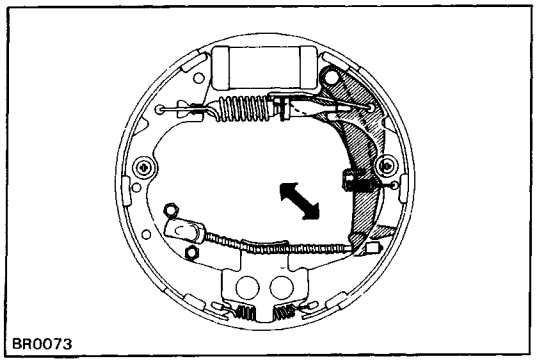

9. CHECK OPERATION OF AUTOMATIC ADJUSTER MECHANISM

(a) Move the parking brake lever of the rear shoe back and forth, as shown. Check that the adjust–ing bolt turns.

If the adjuster does not turn, check for incorrect instal–lation of the rear brakes.

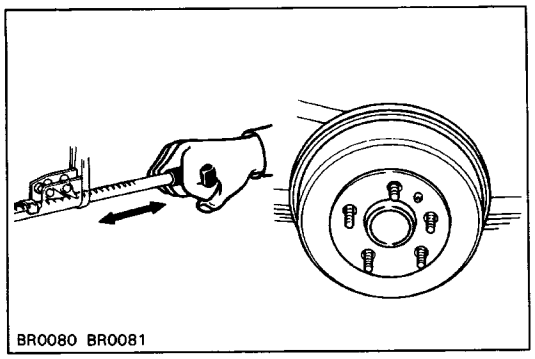

(b) Adjust the adjuster length to the shortest possible amount.
(c) Install the drum.
(d) Pull the parking brake lever all the way up until a clicking sound can no longer be heard.

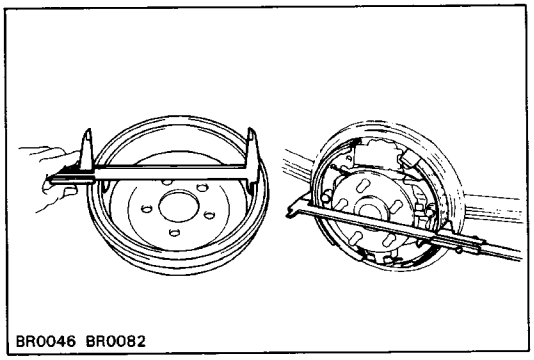

10. CHECK CLEARANCE BETWEEN BRAKE SHOES AND DRUM

(a) Remove the drum.
(b) Measure the brake drum inside diameter and diameter of the brake shoes. Check that the difference between the diameters is the correct shoe clearance.
Shoe clearance: 0.6 mm (0.024 in.)
If incorrect, check the parking brake system.

11. INSTALL BRAKE DRUM AND REAR WHEEL

12. FILL BRAKE RESERVOIR WITH BRAKE FLUID AND BLEED BRAKE SYSTEM
(See page BR–8)

13. CHECK FOR FLUID LEAKAGE

REAR BRAKE
2WD (Duo–Servo Type)
COMPONENTS

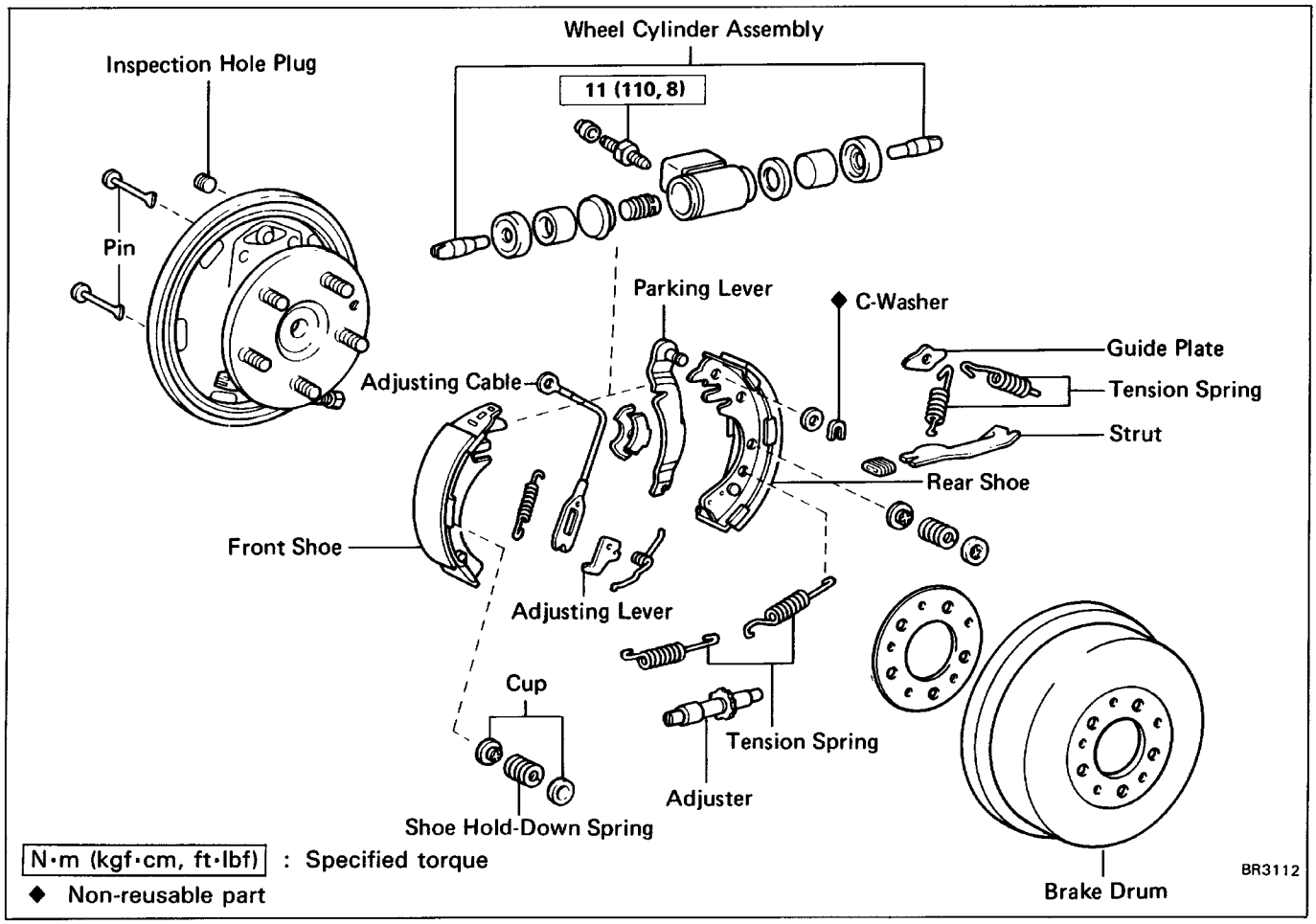

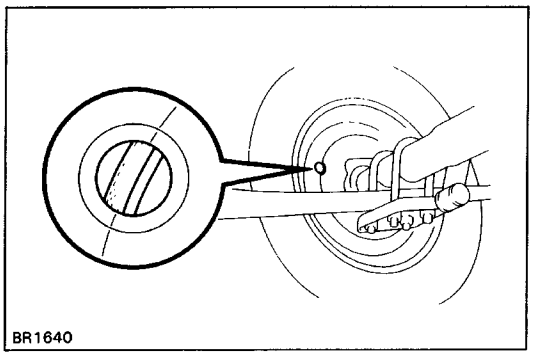

REMOVAL OF REAR DRUM BRAKE

1. INSPECT SHOE LINING THICKNESS

Remove the inspection hole plug, and check the shoe lining thickness through the hole.

If less than minimum, replace the shoes.

Minimum thickness: 1.0 mm (0.039 in.)

2. REMOVE BRAKE DRUM

(Single tire)

Remove the brake drum.

(Double tire)

Remove the rear axle shaft and remove the drum with the axle hub.

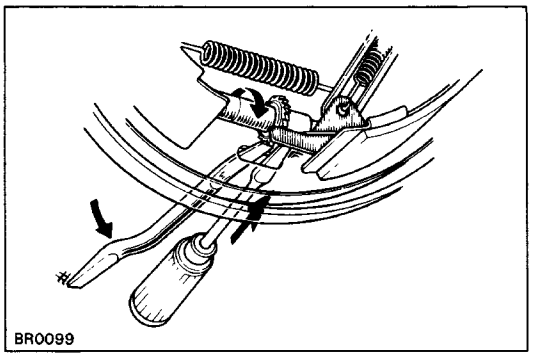

HINT: If the brake drum cannot be removed easily, perform the following steps.

(a) Insert a screwdriver through the hole in the backing plate, and hold the automatic adjusting lever away from the adjusting bolt.

(b) Using another screwdriver, reduce the brake shoe adjustment by turning the adjusting bolt.

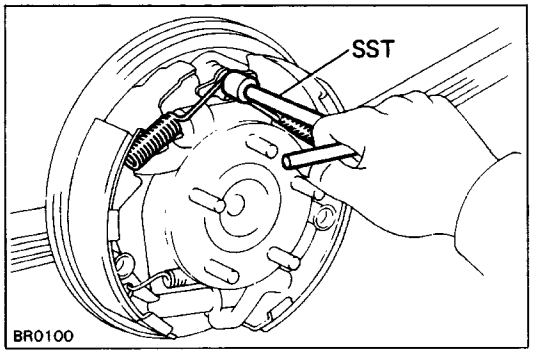

3. REMOVE TWO SHOE RETURN SPRINGS

Using SST, remove the two return springs.
SST 09717–20010

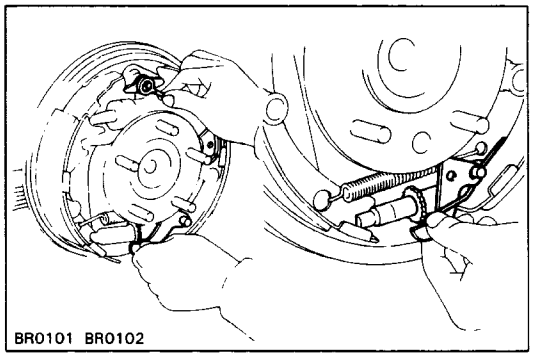

4. REMOVE ADJUSTING CABLE, SHOE GUIDE PLATE, CABLE GUIDE AND ADJUSTING LEVER

(a) Push up the lever and remove the cable, shoe guide plate and cable guide.

(b) Take off the spring from the lever and remove the le– ver and spring.

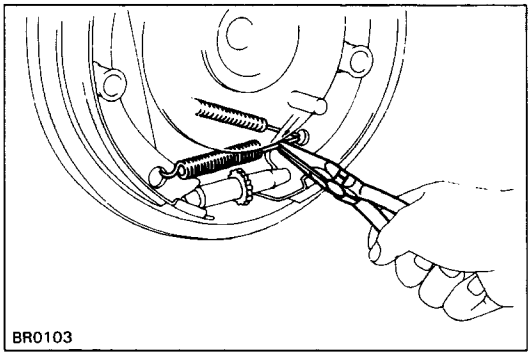

5. REMOVE TWO TENSION SPRINGS

Using pliers, remove the two tension springs.

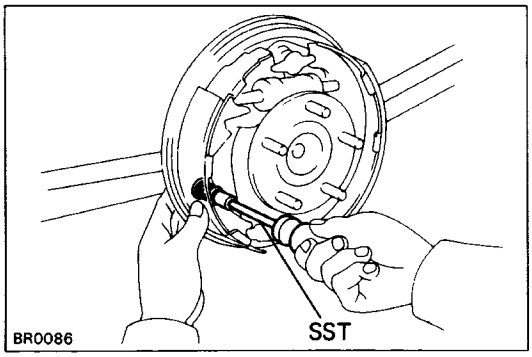

6. REMOVE SHOES, ADJUSTER AND STRUT

(a) Using SST, remove the shoe hold down springs, cups and pins.
SST 09718–00010

(b) Remove the shoes, adjuster and strut.

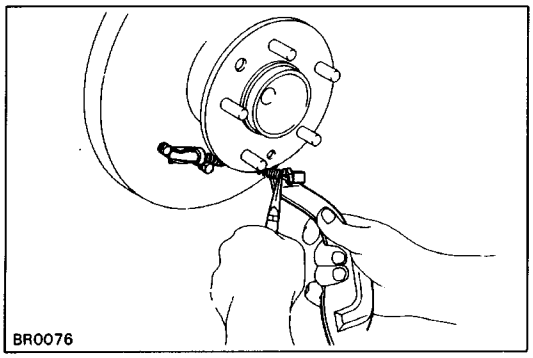

(c) Disconnect the parking brake cable from the parking brake lever

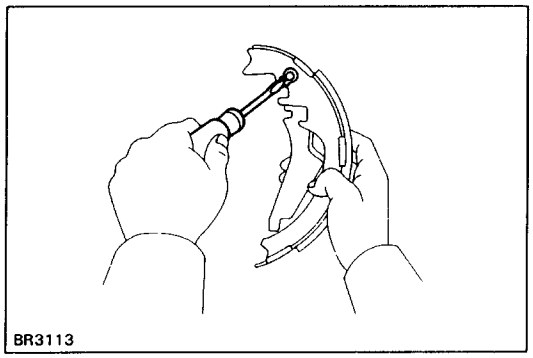

7. REMOVE PARKING BRAKE LEVER

Using a screwdriver, remove the parking brake lever.

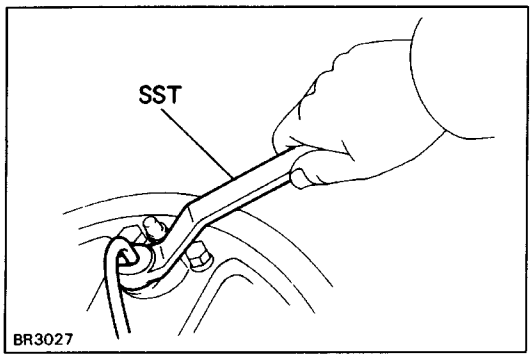

8. DISCONNECT BRAKE TUBE FROM WHEEL CYLINDER

Using SST, disconnect the brake tube. Use a container to catch the brake fluid.

SST 09751–36011

9. REMOVE WHEEL CYLINDER

Remove the two bolts and wheel cylinder.

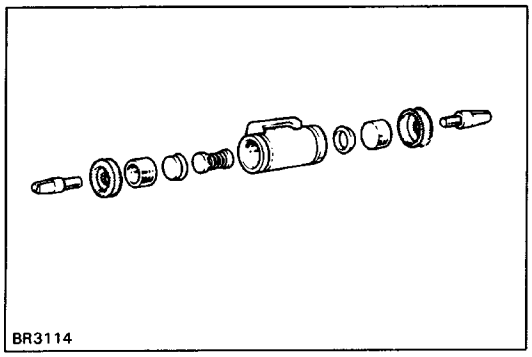

10. REMOVE FOLLOWING PARTS FROM WHEEL CYLINDER

(a) Two piston rods
(b) Two boots
(c) Two pistons
(d) Two piston cups
(e) Spring

INSPECTION AND REPAIR OF REAR BRAKE COMPONENTS

1. INSPECT DISASSEMBLED PARTS

Inspect the disassembled parts for wear, rust or damage.

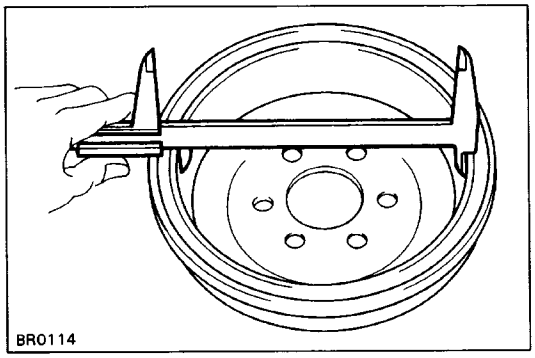

2. INSPECT BRAKE DRUM INSIDE DIAMETER

Standard inside diameter: 254.0 mm (10.00 in.)
Maximum inside diameter: 256.0 mm (10.08 in.)

If the drum is scored or worn, the brake drum may be lathed to the maximum inside diameter.

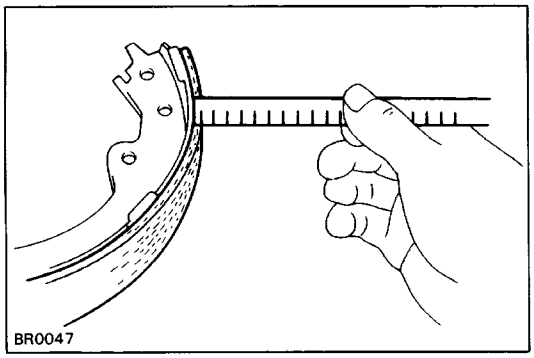

3. INSPECT BRAKE SHOE LINING THICKNESS

Standard thickness: 5.0 mm (0.197 in.)
Minimum thickness: 1.0 mm (0.039 in.)

If the shoe lining is less than minimum or shows signs of uneven wear, replace the brake shoes.
HINT: If any of the brake shoes have to be replaced, re–place all of the rear brake shoes in order to maintain even braking.

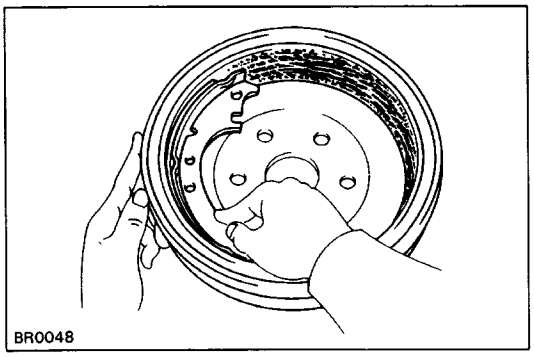

4. INSPECT BRAKE LINING AND DRUM FOR PROPER CONTACT

If the contact between the brake lining and drum is im–proper, repair the lining with a brake shoe grinder, or re–place the brake shoe assembly.

INSTALLATION OF REAR BRAKE
(See page BR–47)

HINT: Assemble the parts in the correct direction as shown.

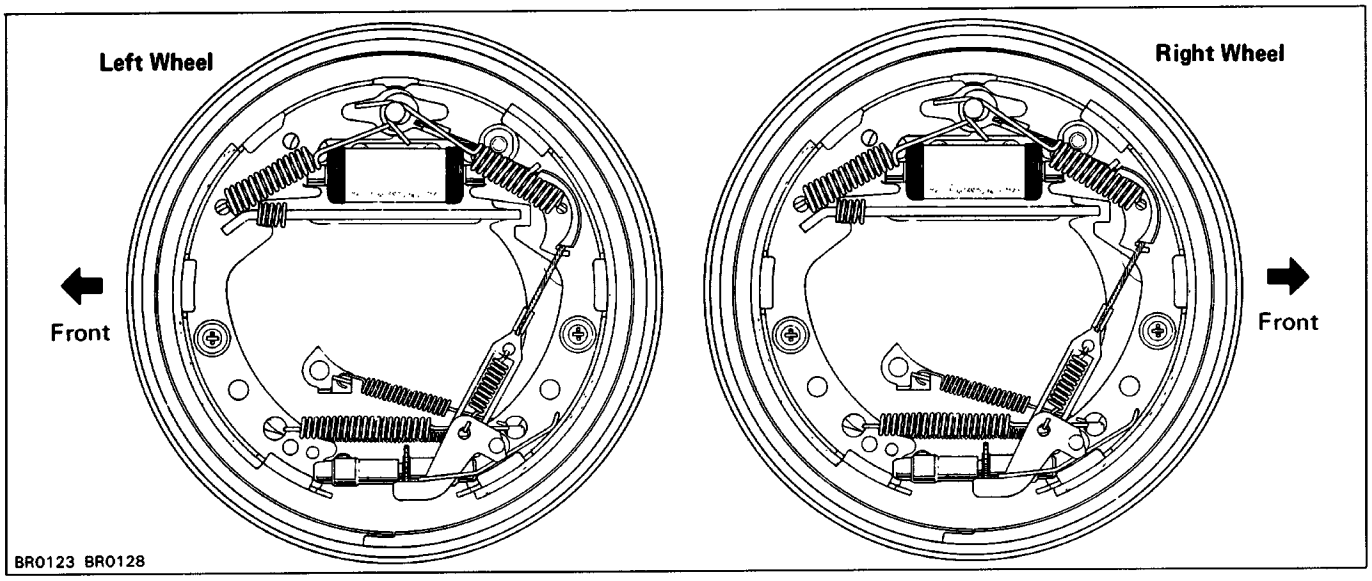

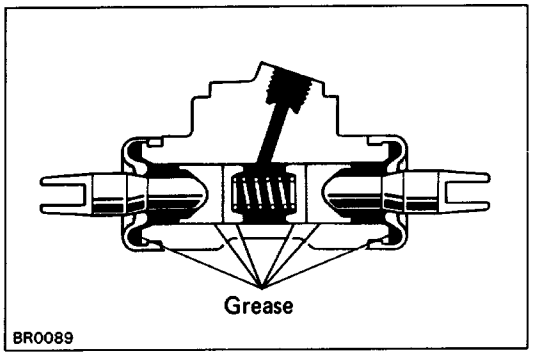

1. APPLY LITHIUM SOAP BASE GLYCOL GREASE TO FOLLOWING PARTS

(a) Two piston cups
(b) Two pistons

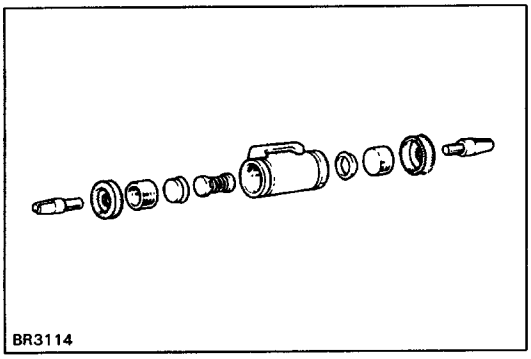

2. ASSEMBLE WHEEL CYLINDER

(a) Install the spring and two piston cups into the wheel cylinder. Check that the flanges of the piston cups are pointed inward.
(b) Install the two pistons.
(c) Install the boots and rods.

3. INSTALL WHEEL CYLINDER

Install the wheel cylinder on the backing plate with the two bolts.
Torque: 14 N–m (145 kgf–cm, 10 ft–lbf)

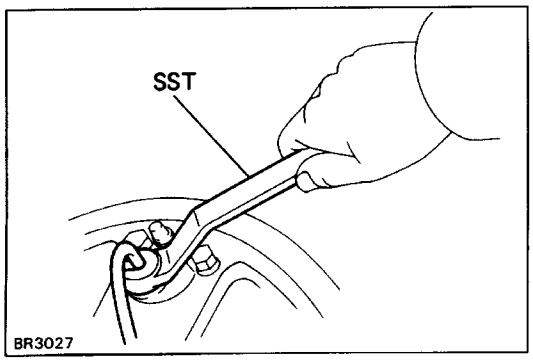

4. CONNECT BRAKE TUBE TO WHEEL CYLINDER

Using SST, connect tube.
SST 09751–36011
Torque: 15 N–m (155 kgf–cm, 11 ft–lbf)

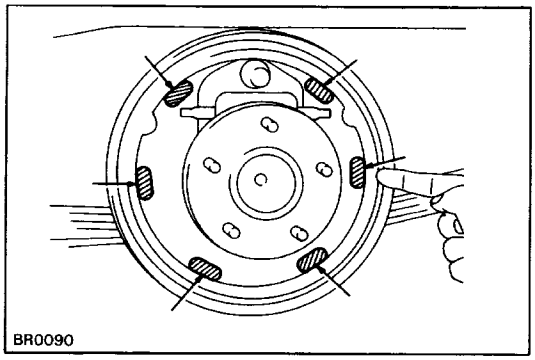

5. APPLY HIGH TEMPERATURE GREASE TO FOLLOW–ING PARTS:

(a) Backing plate and brake shoe contact points
(b) Piston rod and brake shoe contact points

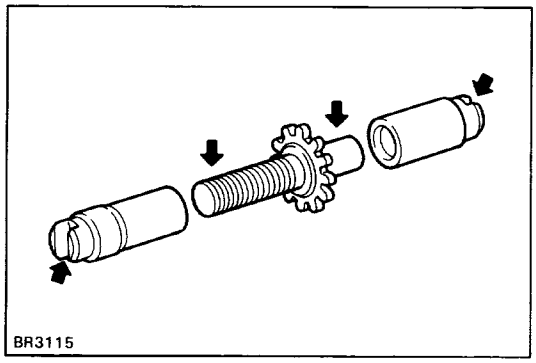

(c) Adjusting bolt
(d) Adjuster and brake shoe contact point

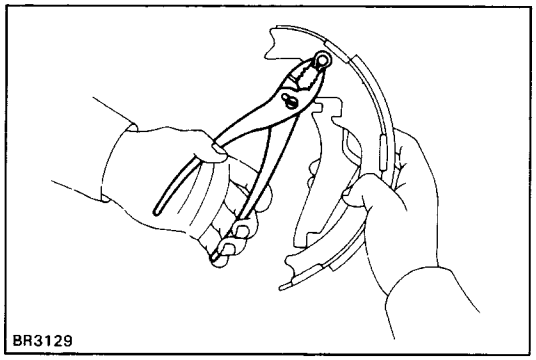

6. INSTALL PARKING BRAKE LEVER

Using pliers, install the parking brake lever with a new C–washer.

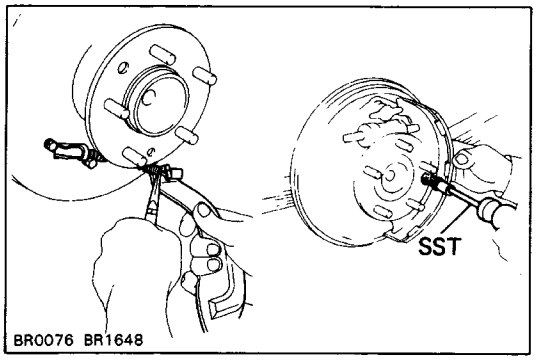

7. INSTALL REAR SHOE

(a) Install the parking brake cable to the parking brake lever.
(b) Set the rear brake shoe in place with the end of the shoe inserted in the piston rod. Using SST, in–stall the shoe hold–down spring and pin.
SST 09718–00010

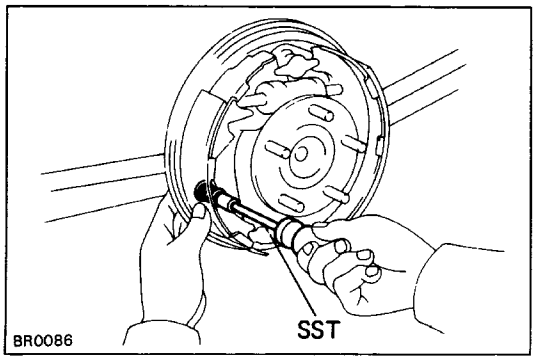

8. INSTALL STRUT AND FRONT SHOE

(a) Install the strut with the spring.
(b) Set the front brake shoe in place with the end of the shoe inserted in the piston rod and the strut in place. Using SST, install the shoe hold–down spring and pin.
SST 09718–00010

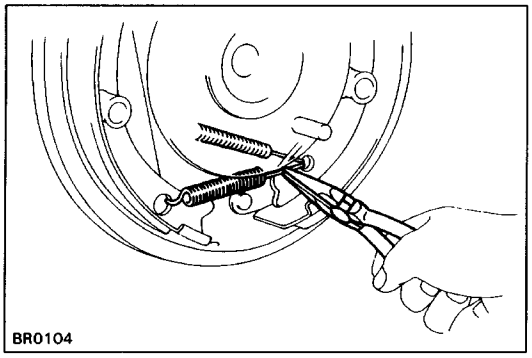

9. INSTALL TWO TENSION SPRINGS

Using pliers, install the two tension springs.

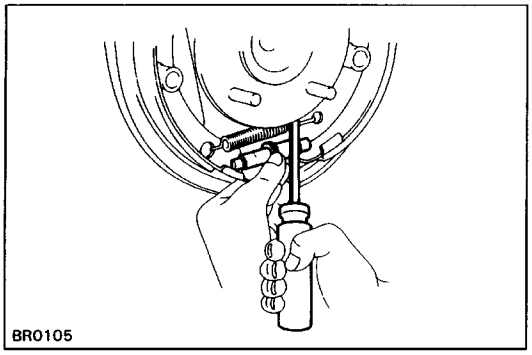

10. INSTALL ADJUSTER

Using a screwdriver, open the shoes and install the ad–juster.

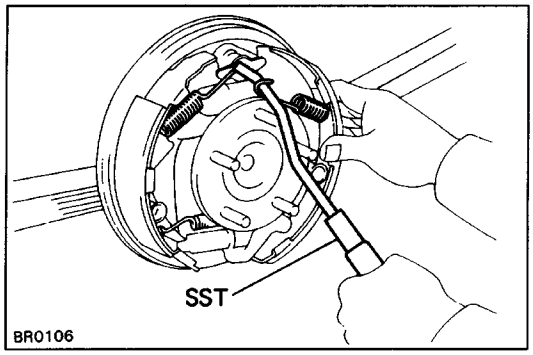

11. INSTALL SHOE GUIDE PLATE, CABLE GUIDE, ADJUSTING CABLE AND RETURN SPRINGS

(a) Install the shoe guide plate, cable guide and adjust–ing cable.

(b) Using SST, install the front return spring and then install the rear return spring.
SST 09718–20010

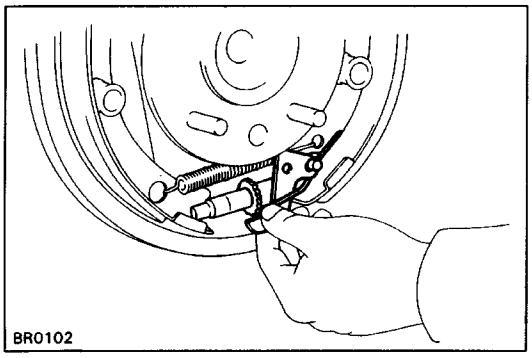

12. INSTALL ADJUSTING LEVER

(a) Install the tension spring to the rear shoe.

(b) Hook the adjusting lever with the cable and install the lever.

(c) Hook the adjusting lever with the tension spring.

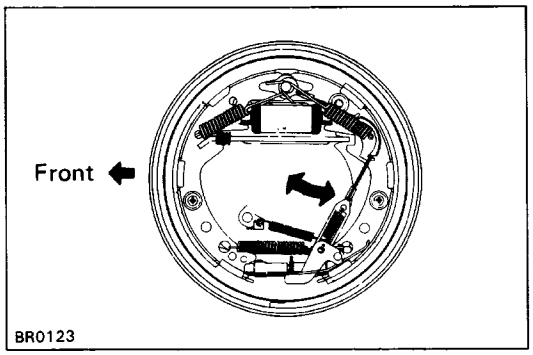

13. CHECK OPERATION OF AUTOMATIC ADJUSTER MECHANISM

(a) Pull the adjusting cable backward as shown, and release. Check that the adjusting bolt turns.
If the bolt does not turn, check for incorrect installation of the rear brakes.

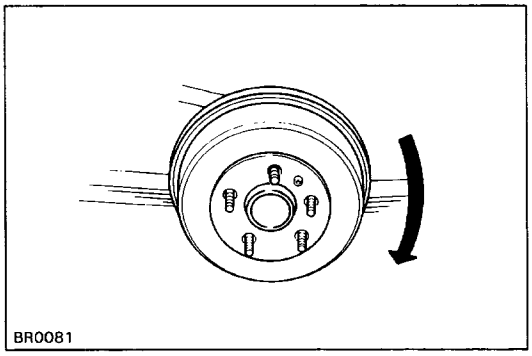

(b) Adjust the adjuster to the shortest possible length.
(c) Install the drum.
(d) Turn the brake drum in reverse direction and depress the brake pedal. Repeat this procedure until a clicking sound can no longer be heard.

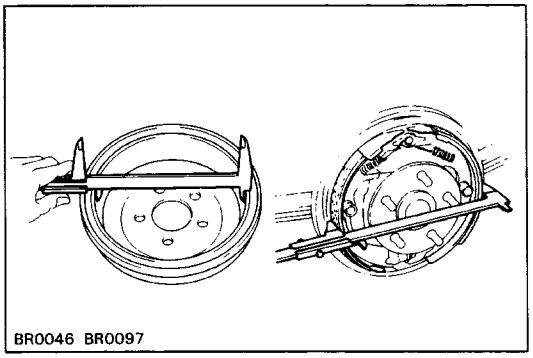

14. CHECK CLEARANCE BETWEEN BRAKE SHOES AND DRUM

(a) Remove the drum.
(b) Measure the brake drum inside diameter and diameter of the brake shoes. Check that the difference between the diameters is the correct shoe clearance.
Shoe clearance: 0.6 mm (0.024 in.)
If incorrect, check the parking brake system.

15. INSTALL BRAKE DRUM

(Single tire)
Install the brake drum.
(Double tire)
Install the brake drum with axle hub and install the rear axle shaft. (See page SA–128)

16. FILL BRAKE RESERVOIR WITH BRAKE FLUID AND BLEED BRAKE SYSTEM
(See page BR–8)

17. CHECK FOR FLUID LEAKAGE

REAR BRAKE
4WD
COMPONENTS

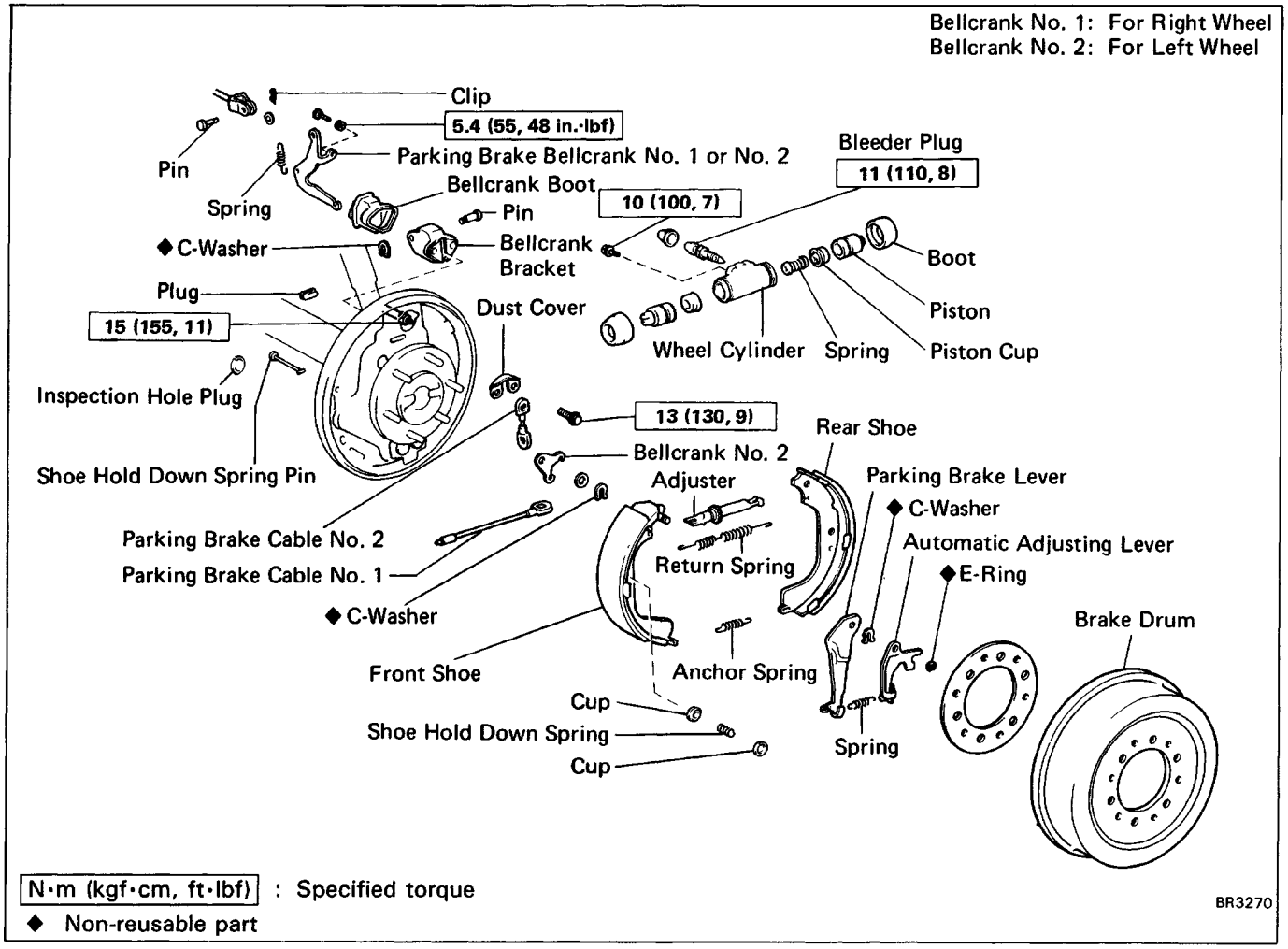

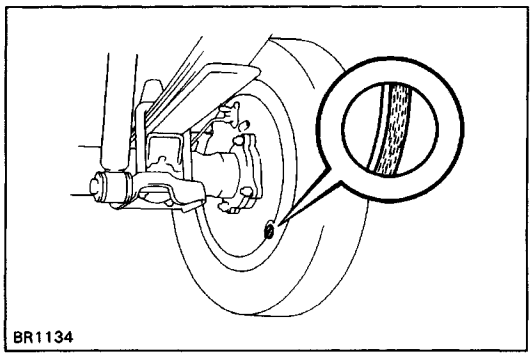

REMOVAL OF REAR DRUM BRAKE

1. INSPECT SHOE LINING THICKNESS

Remove the inspection hole plug, and check the shoe lining thickness through the hole.
If less than minimum, replace the shoes.
Minimum thickness: 1.0 mm (0.039 in.)

2. REMOVE REAR WHEEL

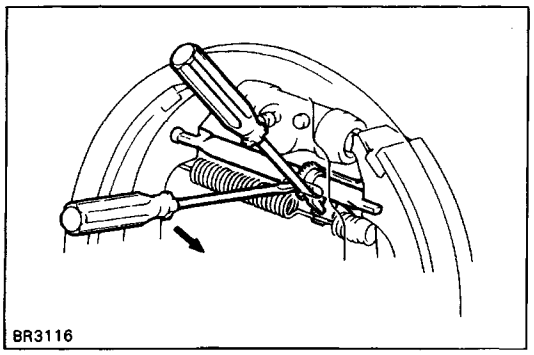

3. REMOVE BRAKE DRUM

HINT: If the brake drum cannot be removed easily, perform the following.

(a) Insert a screwdriver through the hole in the backing plate, and hold the automatic adjusting lever away from the adjusting bolt.

(b) Using another screwdriver, reduce the brake shoe adjustment by turning the adjusting bolt clockwise.

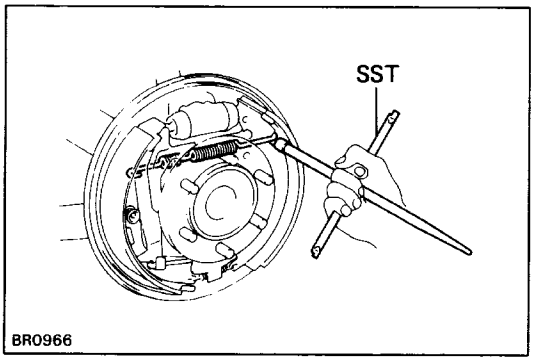

4. REMOVE REAR SHOE

(a) Using SST, disconnect the return spring.
SST 09703–30010

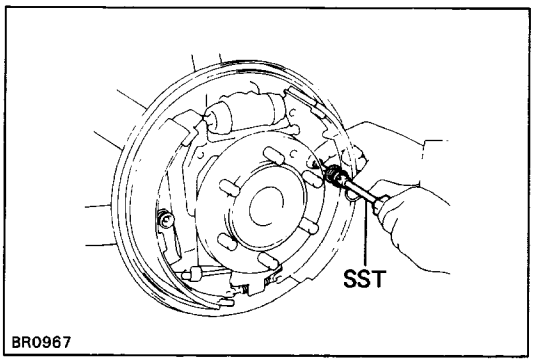

(b) Using SST, remove the shoe hold–down spring, cups and pin.
SST 09718–00010
(c) Disconnect the anchor spring from the rear shoe and remove the rear shoe.
(d) Remove the anchor spring from the. front shoe.

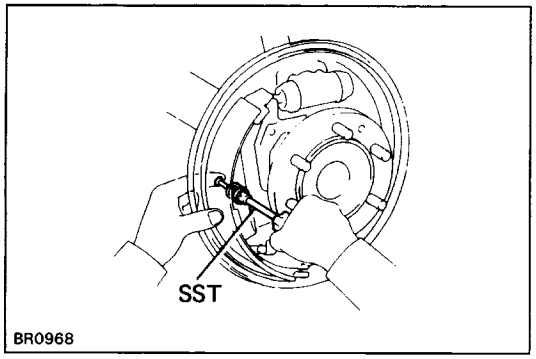

5. REMOVE FRONT SHOE

(a) Using SST, remove the shoe hold–down spring, cups and pin.
SST 09718–00010
(b) Remove the return spring from the front shoe.

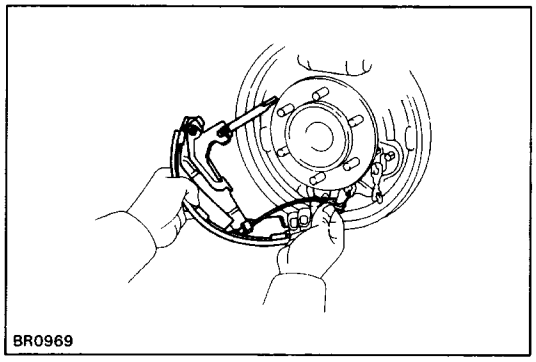

(c) Disconnect the parking brake cable No. 1 from the parking brake bellcrank No.3.
(d) Remove the front shoe with adjuster.
(e) Disconnect the parking brake cable from the front shoe.

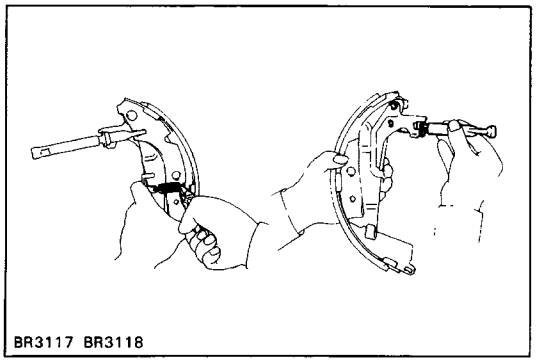

6. REMOVE ADJUSTER FROM FRONT SHOE

(a) Remove the adjusting lever spring.
(b) Remove the adjuster.

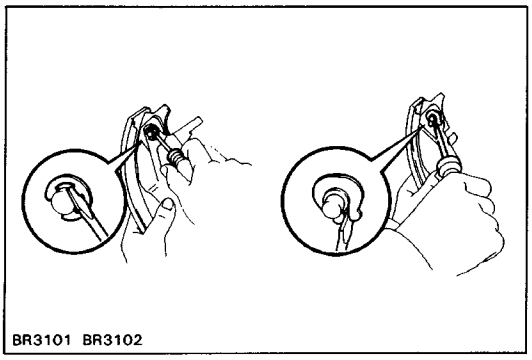

7. REMOVE AUTOMATIC ADJUSTING LEVER AND PARKING BRAKE LEVER

(a) Remove the E–ring.
(b) Remove the automatic adjusting lever.
(c) Remove the C–washer.
(d) Remove the parking brake lever.

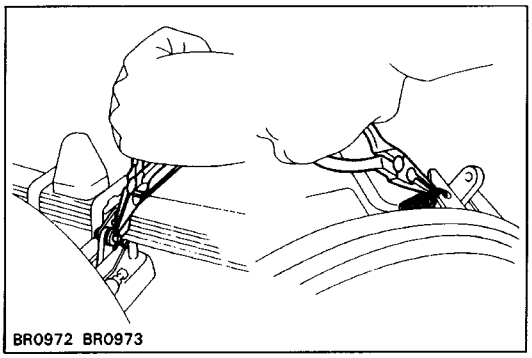

8. REMOVE AND DISASSEMBLE PARKING BRAKE BELLCRANK

(a) Remove the clip and disconnect the parking brake cable.
(b) Remove the tension spring.

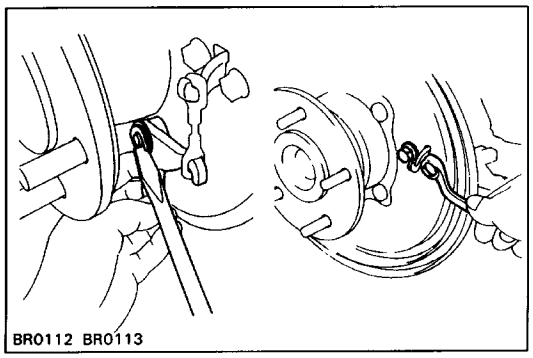

(c) Using a screwdriver, remove the bellcrank No.3 from the backing plate with parking brake cable No. 2.
(d) Remove the parking brake bellcrank No. 1 or No. 2 and dust cover with the two bolts.
(e) Remove the bellcrank boot from the bellcrank bracket.

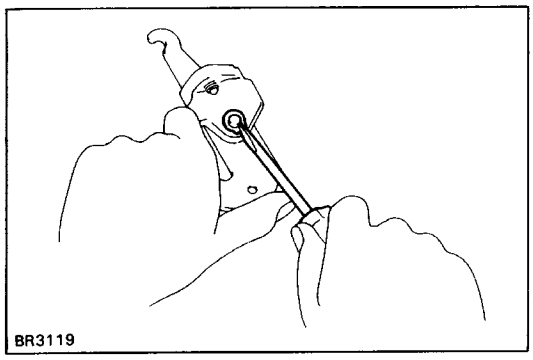

(f) Remove the C–washer and pin.
(g) Remove the par–king brake bellcrank from the bell–crank bracket.

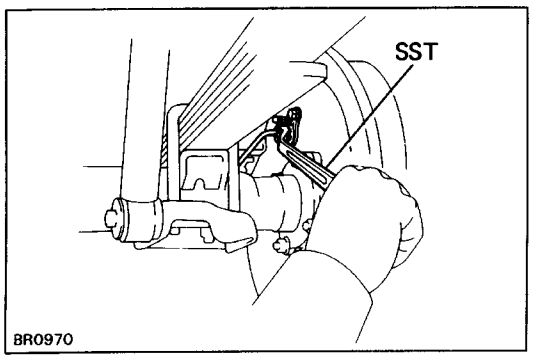

9. REMOVE WHEEL CYLINDER

(a) Using SST, disconnect the brake tube. Use a con–tainer to catch the brake fluid.
SST 09751–36011
(b) Remove the two bolts and the wheel cylinder.

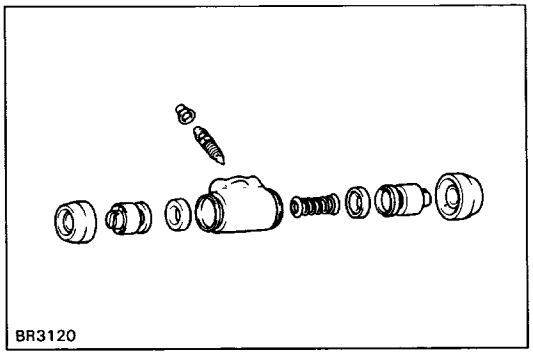

10. DISASSEMBLE WHEEL CYLINDER

Remove the following parts from the wheel cylinder:

- Two boots
- Two pistons
- Two piston cups
- Spring

INSPECTION AND REPAIR OF REAR BRAKE COMPONENTS

1. INSPECT DISASSEMBLED PARTS

Inspect the disassembled parts for wear, rust or damage.

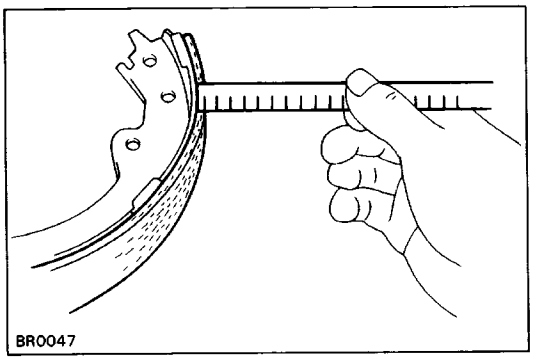

2. MEASURE BRAKE SHOE LINING THICKNESS

Standard thickness: 6.0 mm (0.236 in.)

Minimum thickness: 1.0 mm (0.039 in.)

If the shoe lining is less than minimum or shows signs of uneven wear, replace the brake shoes.

HINT: If any of the brake shoes have to be replaced, re–place all of the rear shoes in order to maintain even brak-ing.

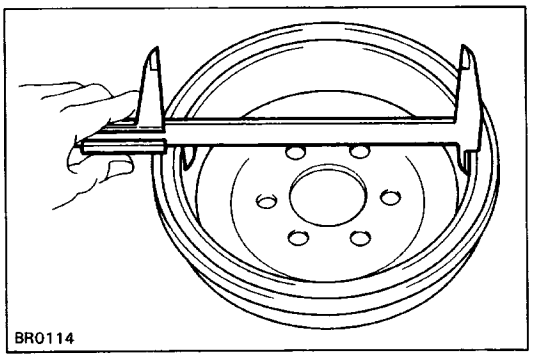

3. MEASURE BRAKE DRUM INSIDE DIAMETER

Standard inside diameter: 295.0 mm (11.61 in.)

Maximum inside diameter: 297.0 mm (11.69 in.)

If the drum is scored or worn, the brake drum may be lathed to the maximum inside diameter.

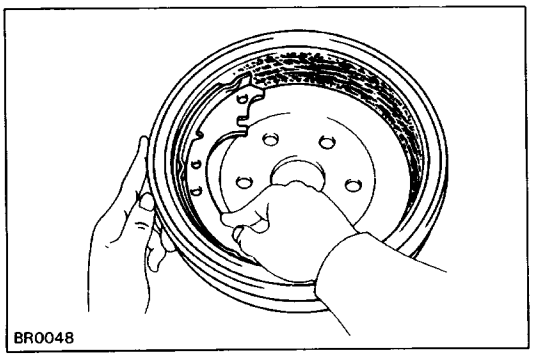

4. INSPECT REAR BRAKE LINING AND DRUM FOR PROP-ER CONTACT

If the contact between the brake lining and drum is im proper, repair the lining with a brake shoe grinder, or re place the brake shoe assembly.

ASSEMBLY OF REAR BRAKES

(See page BR–55)

HINT: Assemble the parts in the correct direction as shown.

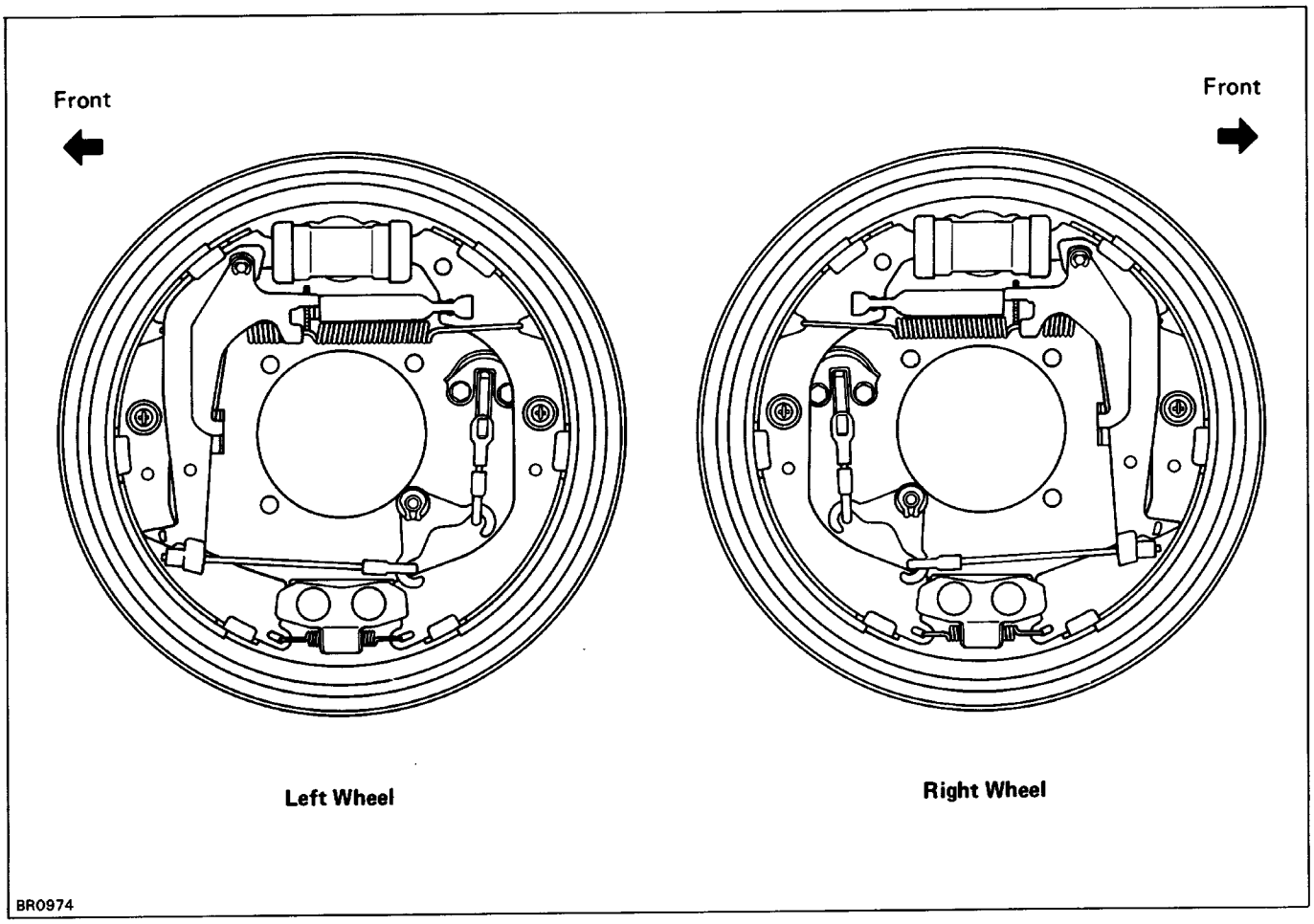

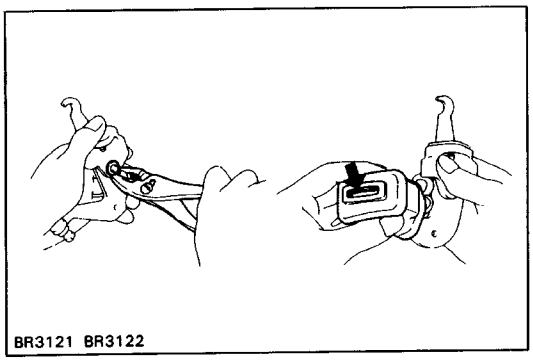

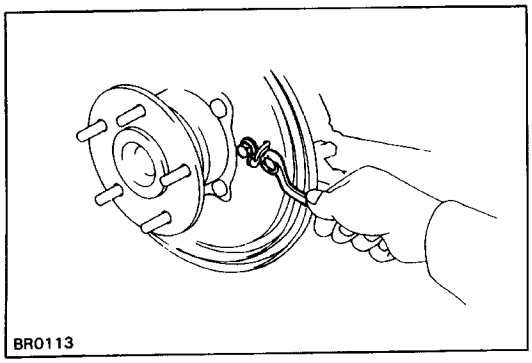

1. ASSEMBLE AND INSTALL PARKING BRAKE BELL-CRANK

(a) Apply high temperature grease to the rotating parts of the bellcrank.

(b) Apply lithium soap base glycol grease to the bell–crank boot and insert it to the parking brake bell–crank.

(c) Install the parking brake bellcrank to the bellcrank bracket.

(d) Install the pin with a new C–washer.

(e) Install the bellcrank boot to the parking brake bell–crank bracket.

(f) Install the parking brake bellcrank and dust cover on the backing plate.

Torque: 13 N–m (130 kgf–cm, 9 ft–lbf)

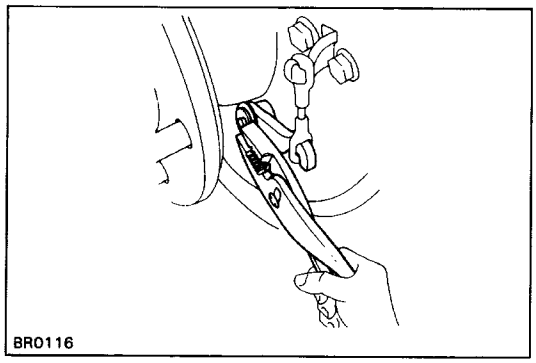

(g) Install the parking brake cable No.2 to the parking brake bellcrank No. 1 or No. 2.
(h) Hook the bellcrank No. 3 to the cable No. 2, and then install the bellcrank No.3 with a new C–washer.

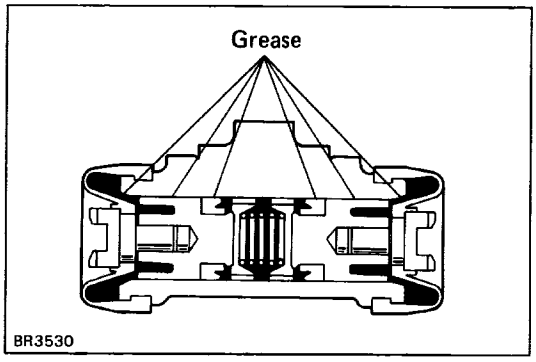

2. APPLY LITHIUM SOAP BASE GLYCOL GREASE TO FOLLOWING PARTS:
(a) Two piston cups
(b) Two pistons

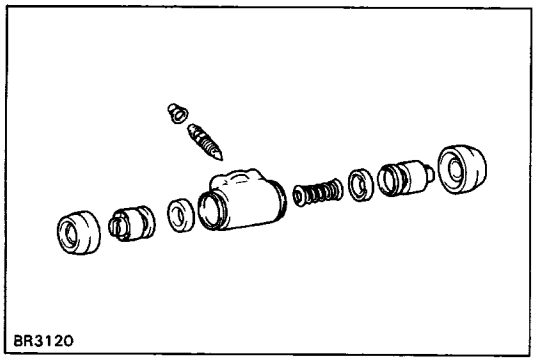

3. ASSEMBLE WHEEL CYLINDER
(a) Install the cup to the each piston.
(b) Install the spring and two pistons into the wheel cylinder. Make sure flanges of the cups are pointed inward.
(c) Install the two boots.

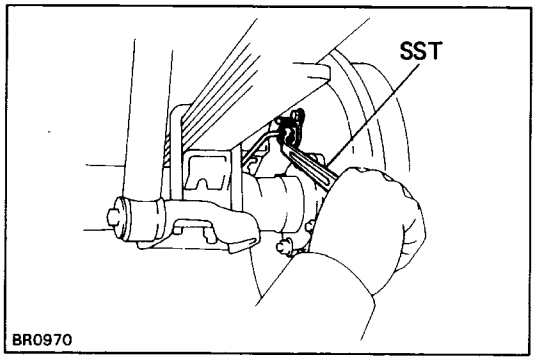

4. INSTALL WHEEL CYLINDER
(a) Install the wheel cylinder on the backing plate with two bolts.
Torque: 10 N–m (100 kgf–cm, 7 ft–lbf)
(b) Using SST, connect the brake tube.
SST 09751–36011
Torque: 15 N–m (155 kgf –cm, 11 ft–lbf)

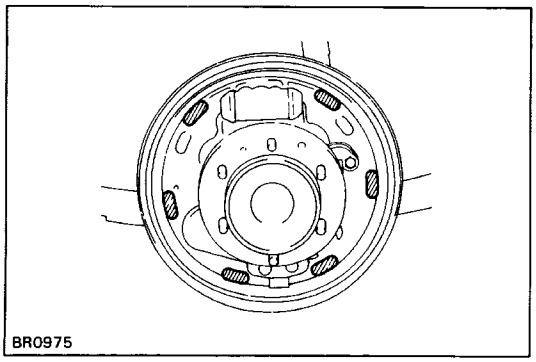

5. APPLY HIGH TEMPERATURE GREASE TO BACKING PLATE AND ADJUSTER
(a) Apply high temperature grease to the brake shoe contact surfaces as shown.

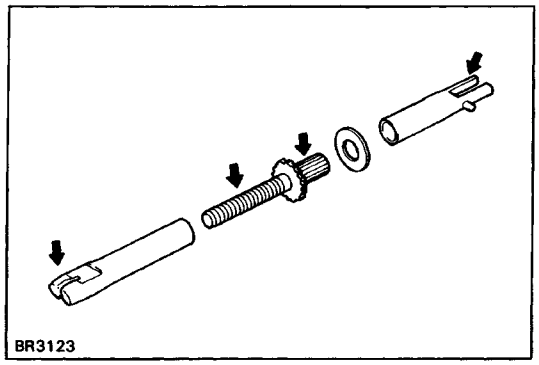

(b) Apply high temperature grease to the adjuster bolt threads and ends.

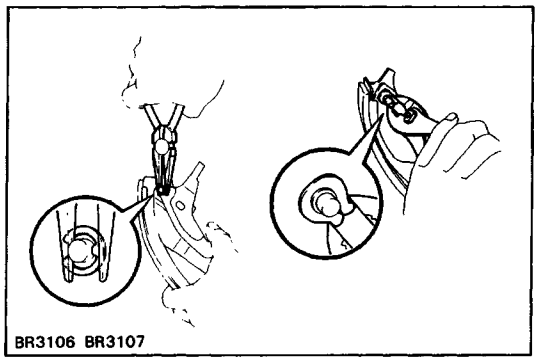

6. INSTALL PARKING BRAKE LEVER AND AUTOMATIC ADJUSTING LEVER

(a) Install the parking brake lever with a new C–washer.

(b) Install the automatic adjusting lever with the E–ring.

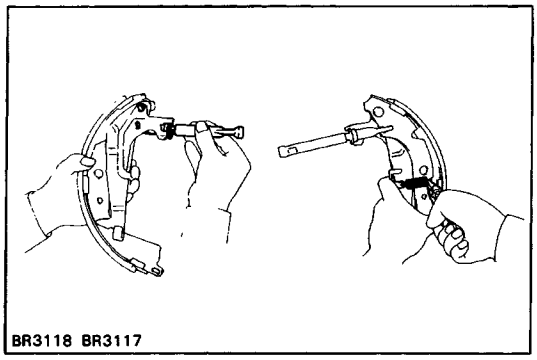

7. INSTALL ADJUSTER TO FRONT SHOE

(a) Install the adjuster to the adjust lever.

(b) Install the adjust lever spring.

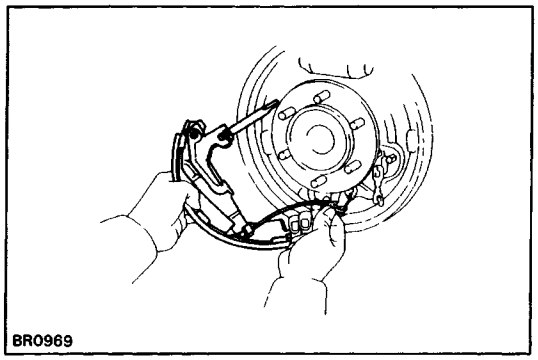

8. INSTALL FRONT SHOE

(a) Install the parking brake cable No. 1 to the parking brake shoe lever.

(b) Hook the another side of the cable No. 1 to the bellcrank No.3.

(c) Install the return spring to the front shoe.

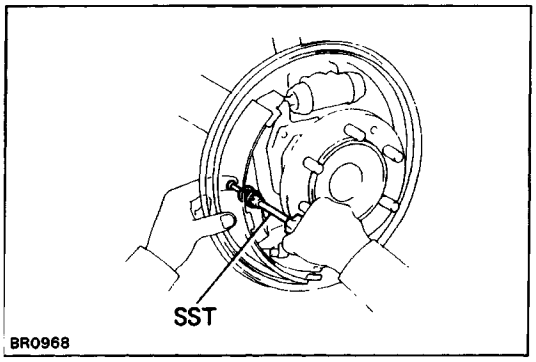

(d) Set the front shoe in place with the end of the shoe inserted in the piston.

(e) Using SST, install the shoe hold–down spring, cups and pin.
SST 09718–00010
NOTICE: Do not allow oil or grease to get on the rub–bing face.

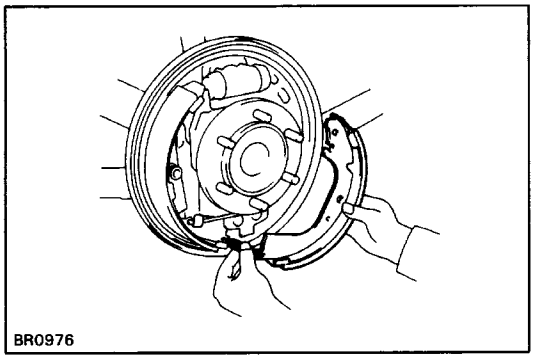

9. INSTALL REAR SHOE

(a) Install the anchor spring between the front and rear shoes.

(b) Set the rear shoe in place with the end of the shoe inserted in the wheel cylinder and the adjuster in place.

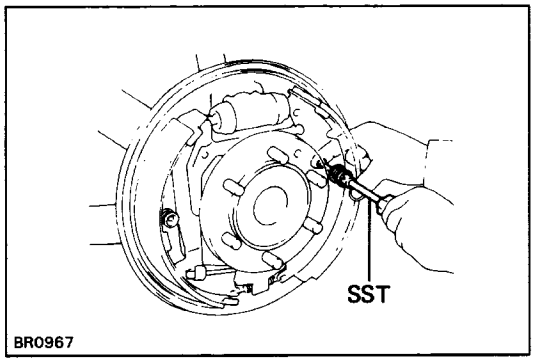

(c) Using SST, install the shoe hold down spring, cups and pin.
SST 09718–00010
NOTICE: Do not allow oil or grease to get on the rub–bing face.

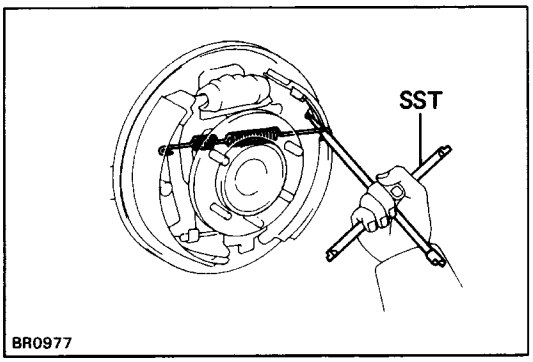

(d) Using SST, connect the return spring.
SST 09718–00010

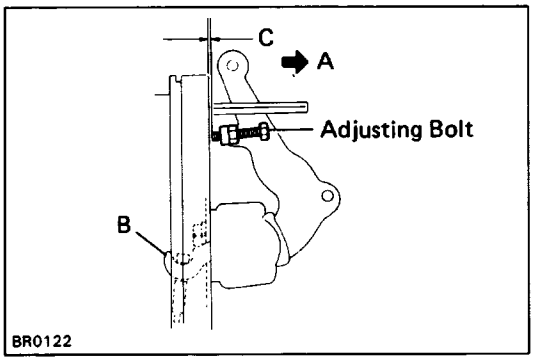

10. ADJUST BELLCRANK

(a) Lightly pull the bellcrank in direction A until there is no slack at part B.

(b) In this condition, turn the adjusting bolt so that di–mension C will be 0.4 – 0.8 mm (0.016 – 0.031 in.).

(c) Lock the adjust bolt with the lock nut.

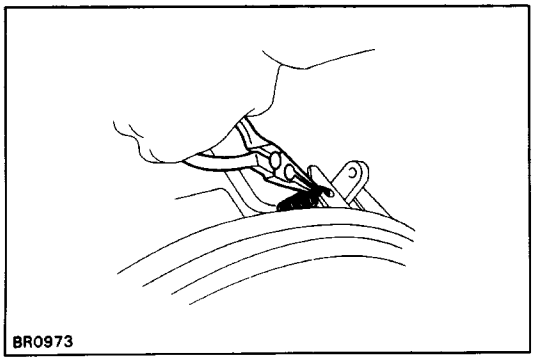

(d) Connect the parking brake cable to the parking brake bellcrank and install the clip.

(e) Install the tension spring.

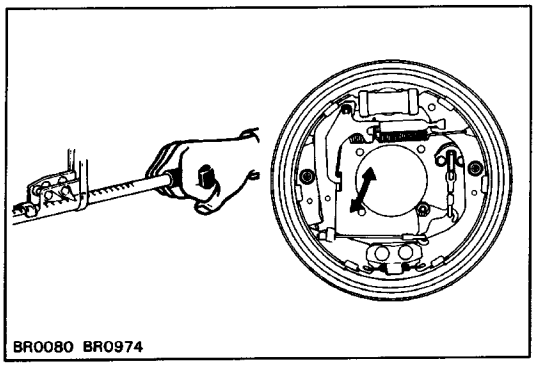

11. CHECK OPERATION OF AUTOMATIC ADJUSTING MECHANISM

(a) Move the parking brake lever of the front shoe back and forth, as shown. Check that the adjuster turns.
If the adjuster does not turn, check for incorrect instal– lation of the rear brakes.

(b) Adjust the adjuster length to the shortest possible amount.

(c) Install the brake drum.

(d) Pull the parking brake lever all the way up until a clicking sound can no longer be heard.

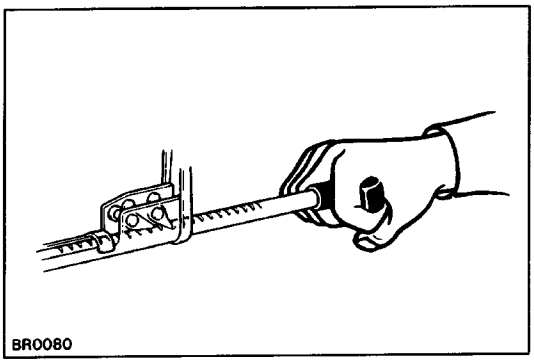

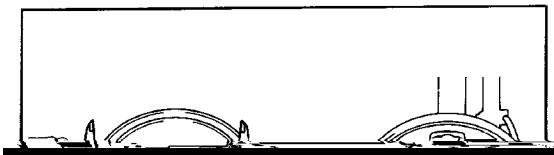

12. CHECK CLEARANCE BETWEEN BRAKE SHOES AND DRUM

(a) Remove the brake drum.

(b) Measure the brake drum inside diameter and di–

BR–8

LOAD SENSING PROPORTIONING AND BY–PASS VALVE (LSP & BV)

COMPONENTS

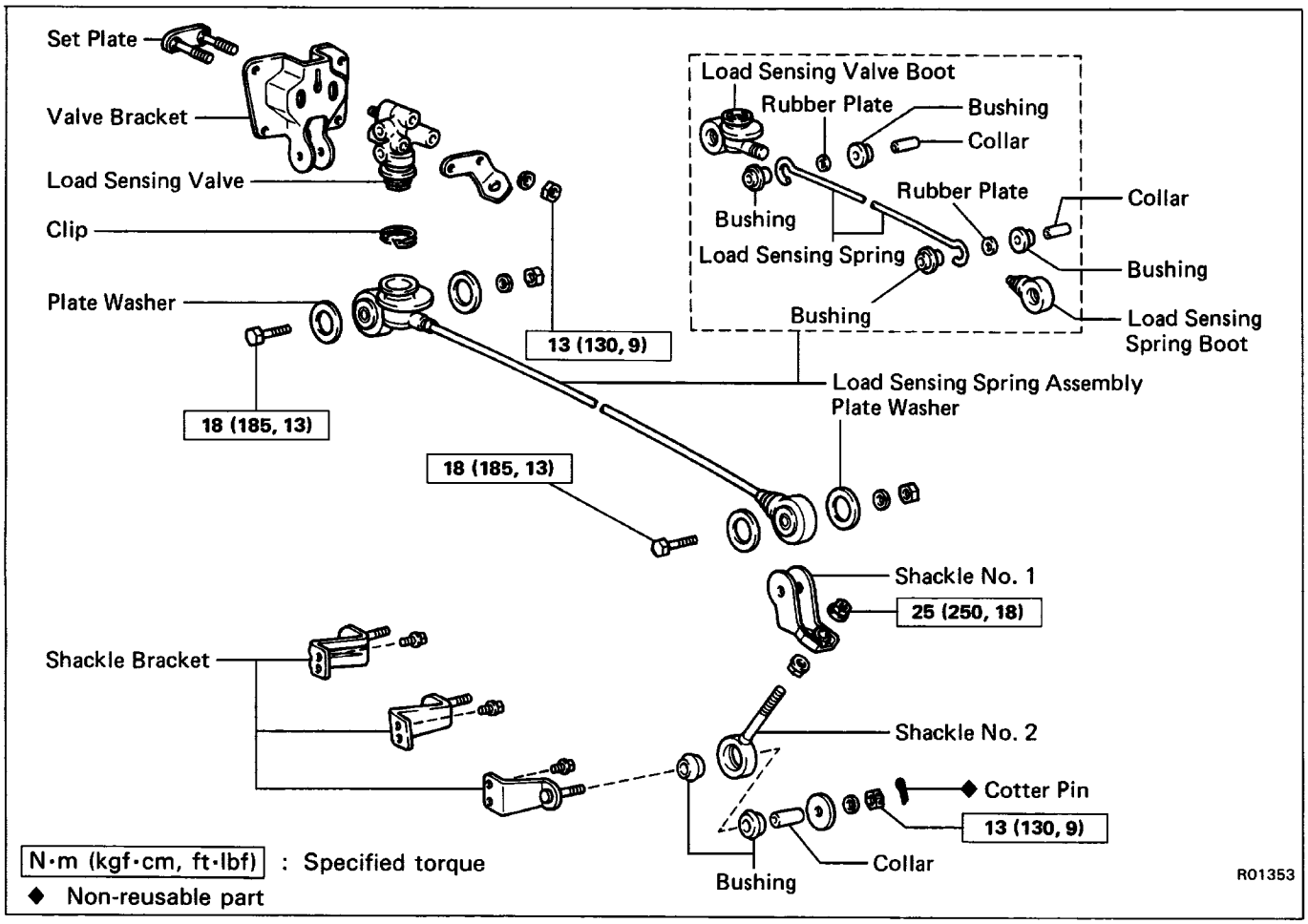

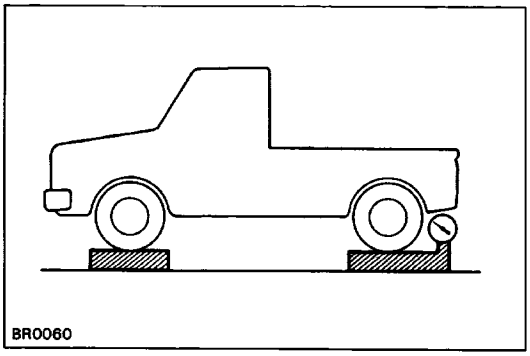

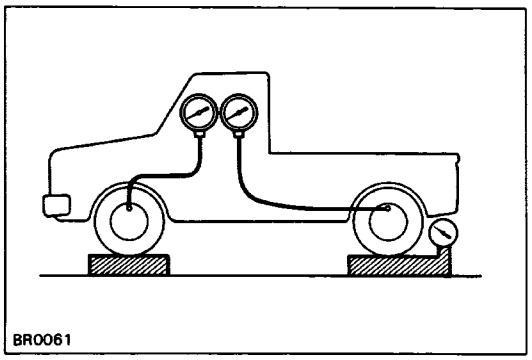

CHECK AND ADJUSTMENT OF FLUID PRESSURE

1. SET REAR AXLE LOAD

Rear axle load (includes vehicle weight):

2WD 1 ton, C & C (SRW)	**900 kg (1,984 lb)**
1/2 ton	**700 kg (1,543 lb)**
C & C (DRW)	**1,150 kg (2,535 lb)**
4WD	**800 kg (1,764 lb)**

HINT: (For C & C)

If the vehicle unladen weight exceeds the specification above, set the rear axle load to the specification shown below. (See step 4 on page BR–65)

Rear axle load (includes vehicle weight):

SRW	**1,678 kg (3,699 lb)**
DRW	**1,996 kg (4,400 lb)**

2. INSTALL LSPV GAUGE (SST) AND BLEED AIR

SST 09709–29017

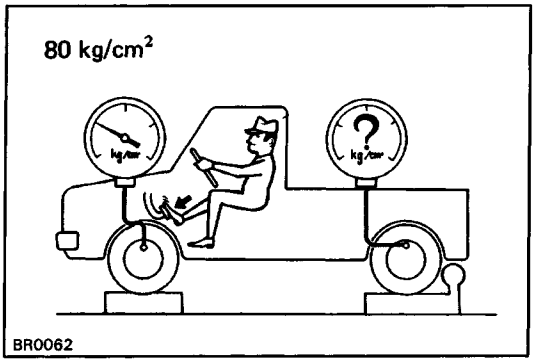

3. RAISE FRONT BRAKE PRESSURE TO 7,845 kPa (80 kgf/cm², 1,138 psi) AND CHECK REAR BRAKE PRESSURE

Rear brake pressure:

2WD 1 ton, C & C (SRW)		**4,413±490 kPa (45±5kgf/cm², 640±71 psi)**
	1/2 ton	**4,315 t 490 kPa (44±5 kgf/cm², 626 ± 71 psi)**
C & C (DRS)		**4,707 ± 490 kPa (48±5 kgf/cm², 683 ± 71 psi)**
4WD Regular cab		**3,923±490 kPa (40±5 kgf/cm², 569±71 psi)**
Extra cab		**4,315±490 kPa (43±5 kgf/cm², 626±71 psi)**

HINT: The brake pedal should not be depressed twice and/or returned while setting to the specified pressure. Read the value of rear brake pressure two seconds after adjusting the specified fluid pressure.
If the brake pressure is incorrect, adjust the fluid pressure.

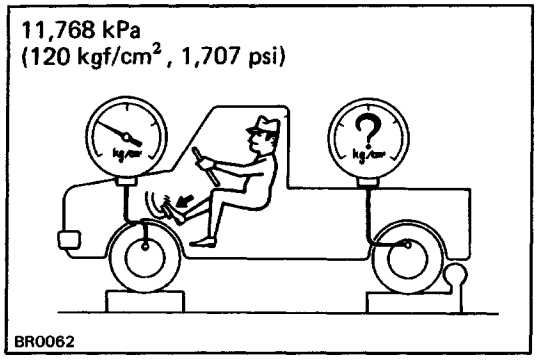

4. (C&C)

RAISE FRONT BRAKE PRESSURE TO 11,768 kPa (120 kgf/cm², 1,707 psi) AND CHECK REAR BRAKE PRESSURE

Rear brake pressure:

SRW	**9,709 ± 588 kPa (99 ± 6 kgf/cm², 1,408 ± 85 psi)**
DRW	**8,336 ± 588 kPa (85 ± 6 kgf/cm², 1,209 ± 85 psi)**

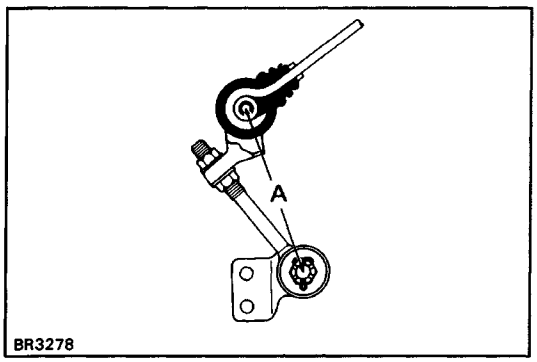

5. IF NECESSARY, ADJUST FLUID PRESSURE

(a) Adjust the length of the No.2 shackle.

Low pressure Lengthen A
High pressure Shorten A

Initial set:

2WD	**78 mm (3.07 in.)**
4WD	**120 mm (4.72 in.)**

Adjusting range:

2WD	**72 – 84 mm (2.83 – 3.31 in.)**
4WD	**114 – 126 mm (4.49 – 4.96 in.)**

HINT: One turn of the nut changes the fluid pressure as shown in the table below.

		Rear brake pressure
2WD	1/2 ton, C & C (SRW)	74 kPa (0.75 kgf/cm², 11 psi)
	1 ton, C & C (DRW)	98 kPa (1.0 kgf/cm², 14 psi)
4WD		59 kPa (0.6 kgf/cm², 8.5 psi)

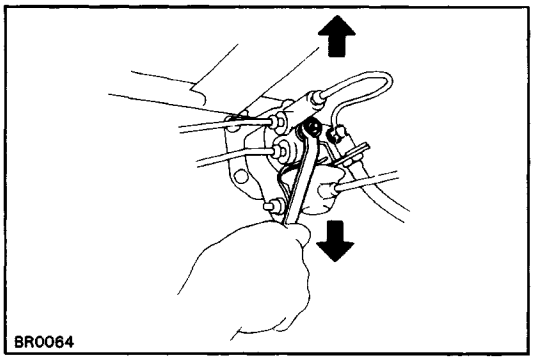

(b) In event the pressure cannot be adjusted by the No. 1 shackle, raise or lower the valve body.
Low pressure – Lower
High pressure – Raise

(c) Torque the nuts.
Torque: 13 N–m (130 kgf–cm, 9 ft–lbf)

(d) Adjust the length of the No. 1 shackle again.
If it cannot be adjusted, inspect the valve housing.

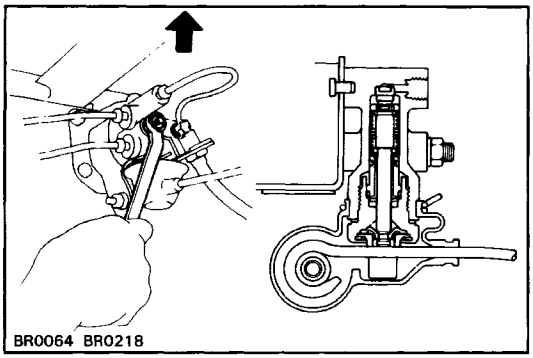

6. IF NECESSARY, CHECK VALVE BODY

(a) Assemble the valve body in the uppermost position.
HINT: When the brakes are applied, the piston will move down about 1 mm (0.04 in.). Even at this time, the piston should not make contact with or move the load sensing spring.

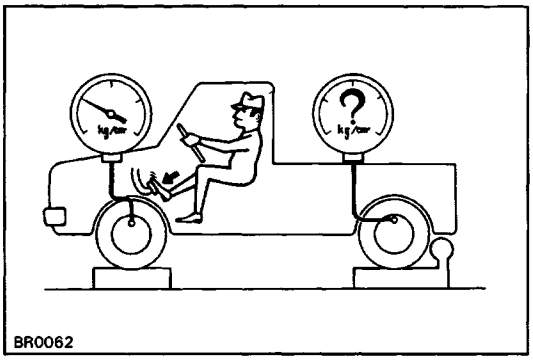

(b) In this position, check the rear brake pressure.
2WD (SRW)

kPa (kgf/cm^2, psi)

Front brake pressure	Rear brake pressure
490 (5, 71)	490 (5, 71)
2,452 (25, 356)	883 – 1,275 (9 – 13, 128 – 185)
5,884 (60, 853)	1,765 – 2,452 (18 – 25, 256 – 356)

4WD (DRW) kPa (kgf/cm^2, psi)

Front brake pressure	Rear brake pressure
490 (5, 71)	490 (5, 71)
2,452 (25, 356)	1,020 – 1,412 (10.4 – 14.4, 148 – 205)
5,884 (60, 853)	2,148 – 2,834 (21.9 – 28.9, 311 – 411)

4WD (Regular cab) kPa (kgf/cm^2, psi)

Front brake pressure	Rear brake pressure
981 (10, 142)	981 (10, 142)
2,452 (25, 356)	1,079 – 1,471 (11 – 15, 156 – 213)
5,884 (60, 853)	1,618 – 2,305 (16.5 – 23.5, 235 – 334)

4WD (Extra cab) kPa (kgf/cm^2, psi)

Front brake pressure	Rear brake pressure
981 (10, 142)	981 (10, 142)
2,452 (25,356)	1,157 – 1,549 (11.8 – 15.8, 168 – 225)
5,884 (60, 853)	1,863 – 2,550 (19 – 26, 270 – 370)

If the measured value is not within standard, replace the valve body.

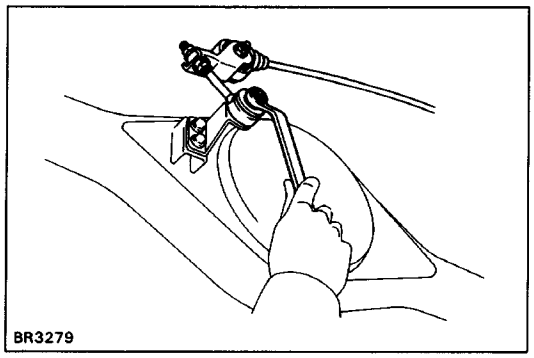

REMOVAL OF LSP & BV OR LSPV

(See page BR–64)

1. DISCONNECT SHACKLE NO.2 FROM BRACKET

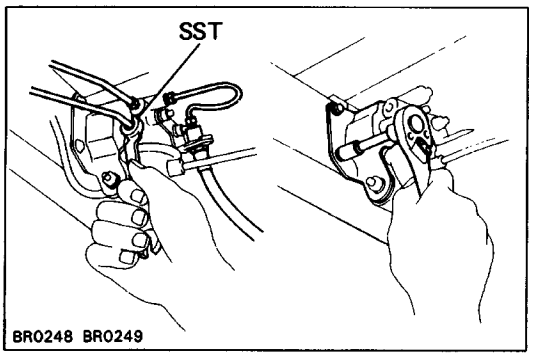

2. REMOVE LSP & BV (LSPV) ASSEMBLY

(a) Using SST, disconnect the brake tube from the valve body.
SST 09751–36011

(b) Remove the valve bracket mounting bolts and remove the LSP & BV (LSPV) assembly.

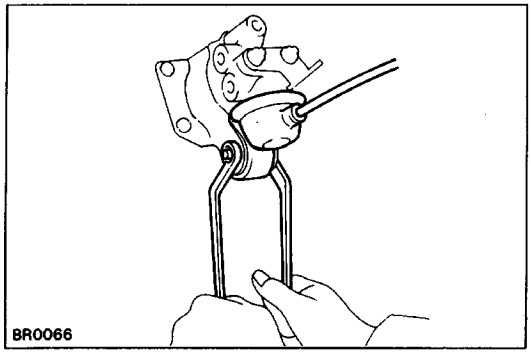

DISASSEMBLY OF LSP & BV OR LSPV ASSEMBLY

1. REMOVE VALVE BRACKET

(a) Remove the nut and bolt as shown.

(b) Remove the two nuts, and remove the bracket and set plate from the valve body.

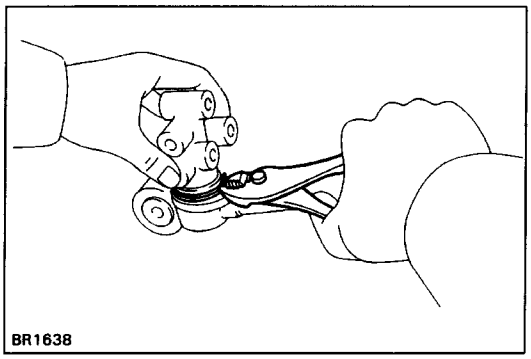

2. DISCONNECT SPRING FROM VALVE

Using pliers, remove the clip, and remove the spring from the valve.

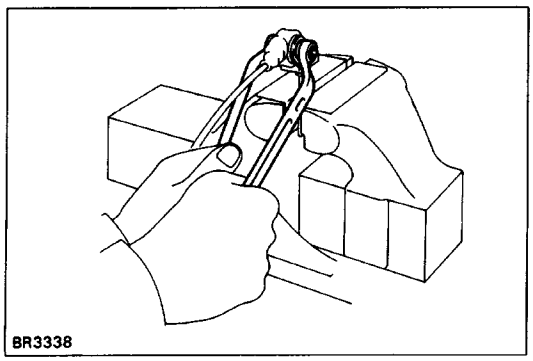

3. REMOVE SHACKLE NO. 1 AND NO.2

Remove the nut and bolt, and then remove the shackle No.1 and No.2, and two plate washers from the load sensing spring assembly.

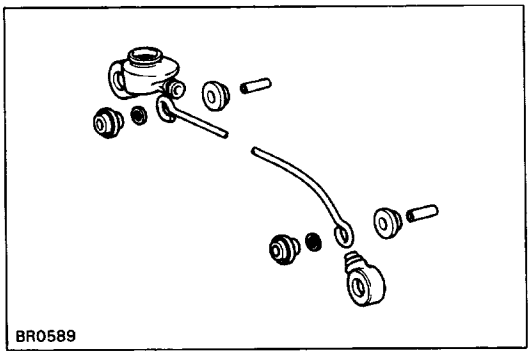

4. DISASSEMBLE LOAD SENSING SPRING

Disassemble the following parts.

(a) Bushings
(b) Collars
(c) Rubber plates
(d) Load sensing valve boot
(e) Load sensing spring boot

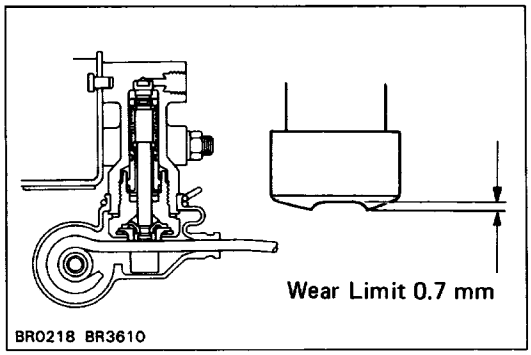

INSPECTION OF LSP & BV OR LSPV

INSPECT VALVE PISTON PIN AND LOAD SENSING CONTACT SURFACE FOR WEAR

Wear limit: 0.7 mm (0.028 in.)

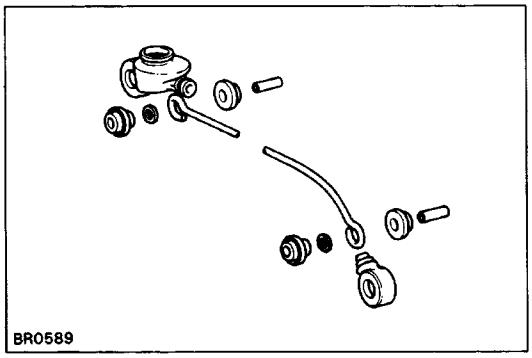

ASSEMBLY OF LSP & BV OR LSPV

(See page BR–64)

1. ASSEMBLE FOLLOWING PARTS TO LOAD SENSING SPRING:

(a) Load sensing valve boot
(b) Load sensing spring boot
(c) Bushings
(d) Rubber plates
(e) Collars

HINT: Apply lithium soap glycol grease to all rubbing ar–eas.

Do not mistake the valve side for the shackle side of the load sensing spring.

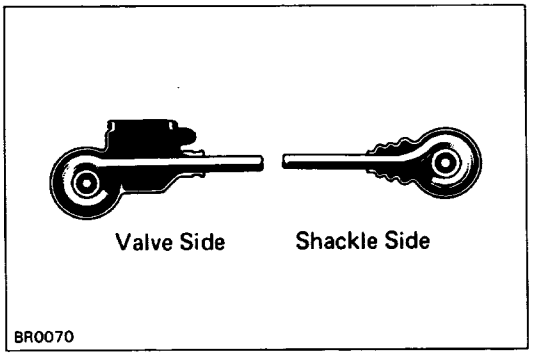

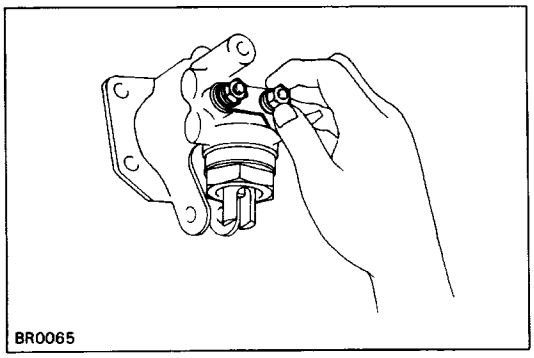

2. ASSEMBLE VALVE BODY TO BRACKET

Assemble the valve body to the valve body bracket.

HINT: Finger tighten the valve body mounting nuts.

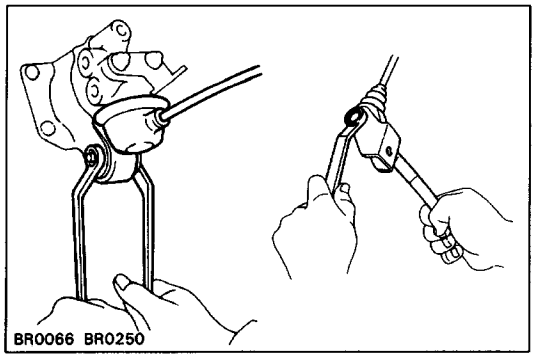

3. CONNECT VALVE BODY AND NO. 1 SHACKLE TO LOAD SENSING SPRING

CAUTION: When connecting the shackle to the load sensing spring with a bolt and nut, insert the bolt from the front side of vehicle.

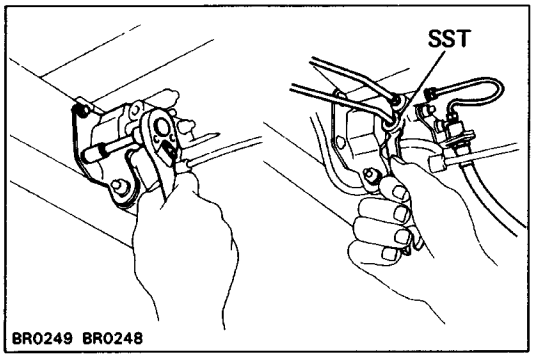

INSTALLATION OF LSPV & BV OR LSPV

1. INSTALL LSP & BV (LSPV) ASSEMBLY TO FRAME

Torque: 19 N–m (195 kgf –cm, 14 ft–lbf)

2. CONNECT BRAKE TUBE

Using SST, connect the brake tubes.

Torque: 15 N–m (155 kgf–cm, 11 ft–lbf)

SST 09751–36011

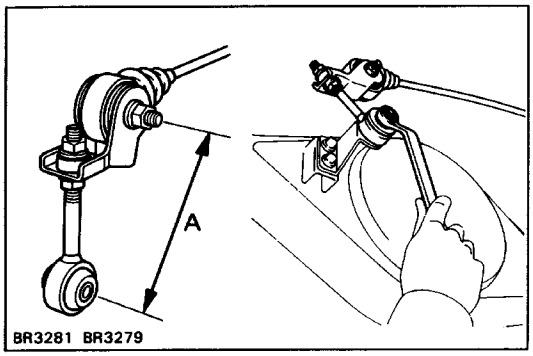

3. CONNECT SHACKLE NO.2 BRACKET

(a) Install the shackle No.2 to the load sensing spring.

(b) Set dimension A.

Initial set: 2WD 78 mm (3.07 in.)
4WD 120 mm (4.72 in.)

(c) Connect the shackle No.2 to the shackle bracket.

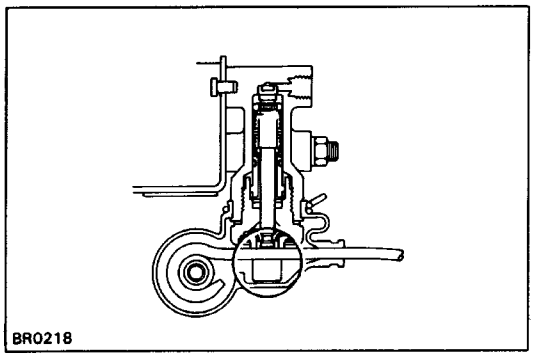

4. SET REAR AXLE LOAD (See page BR–64)

5. SET VALVE BODY

(a) When pulling down the load sensing spring, confirm that. the valve piston moves down smoothly.

(b) Position the valve body so that the valve piston lightly contacts load sensing spring.

(c) Tighten the valve body mounting nuts.

6. BLEED BRAKE LINE (See page BR–8)

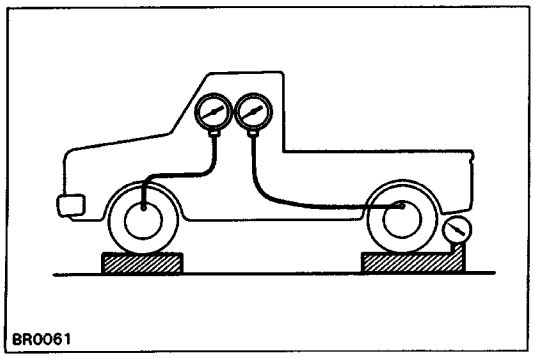

7. CHECK AND ADJUST LSP & BV OR (LSPV) FLUID PRESSURE
(See page BR–64)

8. APPLY SEALANT TO SHACKLE NO.2

Apply sealant to the top portion of the shackle No.2 bolt threads not to lose the upper lock nut.

Sealant: Part No. 08833–00070, THREE BOND 1324 or equivalent

REAR–WHEEL ANTI–LOCK BRAKE SYSTEM

General Description

- The Rear–Wheel Anti–Lock Brake System is a brake system which controls the wheel cylinder hydraulic pressure of the rear wheels during sudden braking and braking on slippery road surfaces, preventing the rear wheels from locking.
- In case a malfunction occurs, a diagnosis function and fail–safe system have been adopted for the Rear–Wheel Anti–Lock Brake System to increase serviceability.

LOCATION OF SYSTEM COMPONENTS

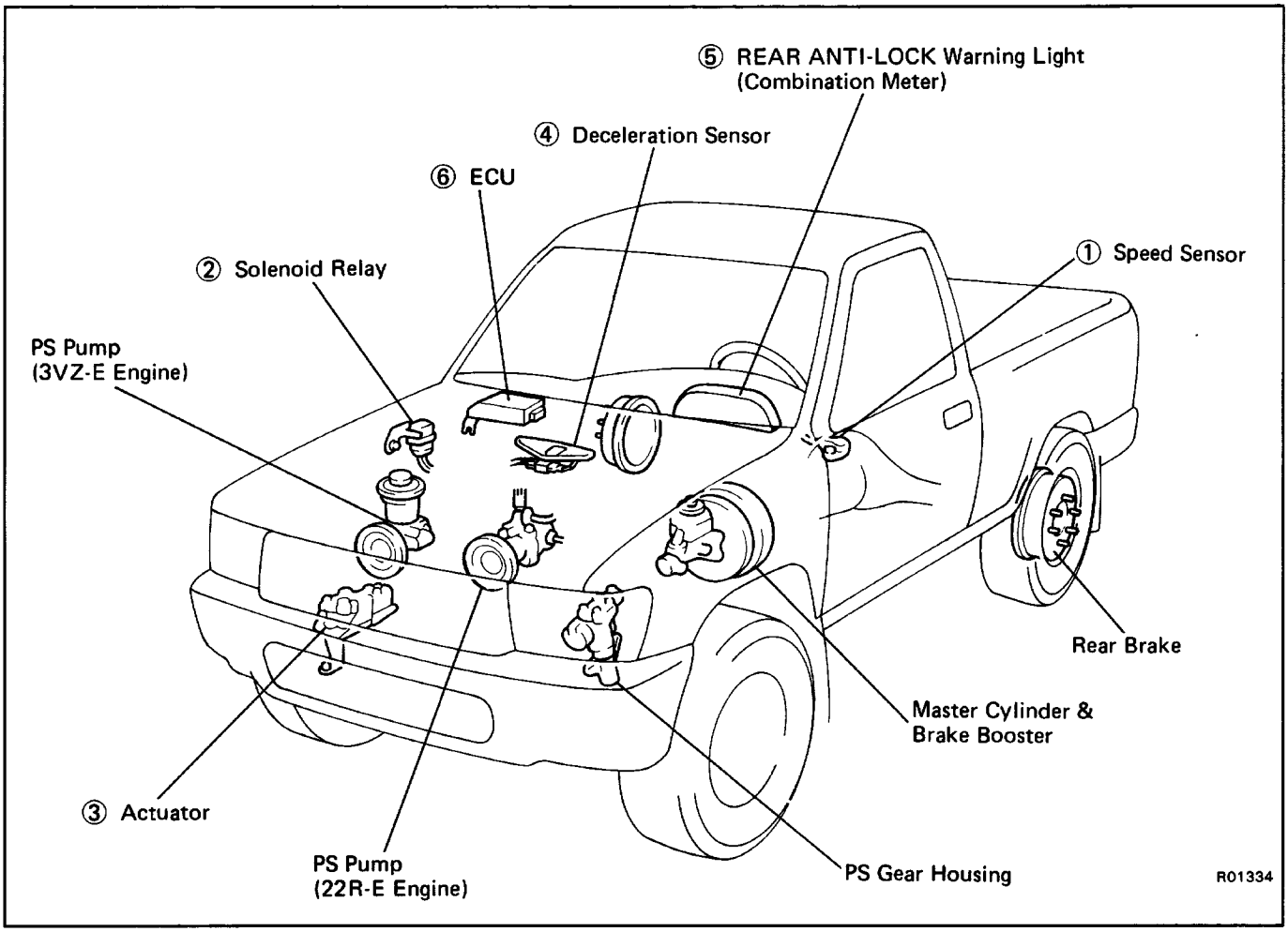

FUNCTION OF COMPONENTS

No.	Components	Function
1	Speed Sensor	Detects the wheel speed from the rotation of the rear differential ring gear.
2	Solenoid Relay	Supplies electric current to the solenoid valve of the actuator.
3	Actuator	Controls the brake fluid pressure to rear brake wheel cylinders through signals from the ECU.
4	Deceleration Sensor	Detects the vehicle deceleration rate from the deceleration of the body.
5	REAR ANTI–LOCK Warning Light	Lights up to alert the driver when trouble has occurred in the Rear–wheel Anti–Lock Brake System.
6	ECU	According the wheel speed signals from the speed sensor and vehicle deceleration signals from the deceleration sensor, it calculates acceleration, deceleration and slip values and sends signals to the actuator to control brake fluid pressure.

WIRING DIAGRAM

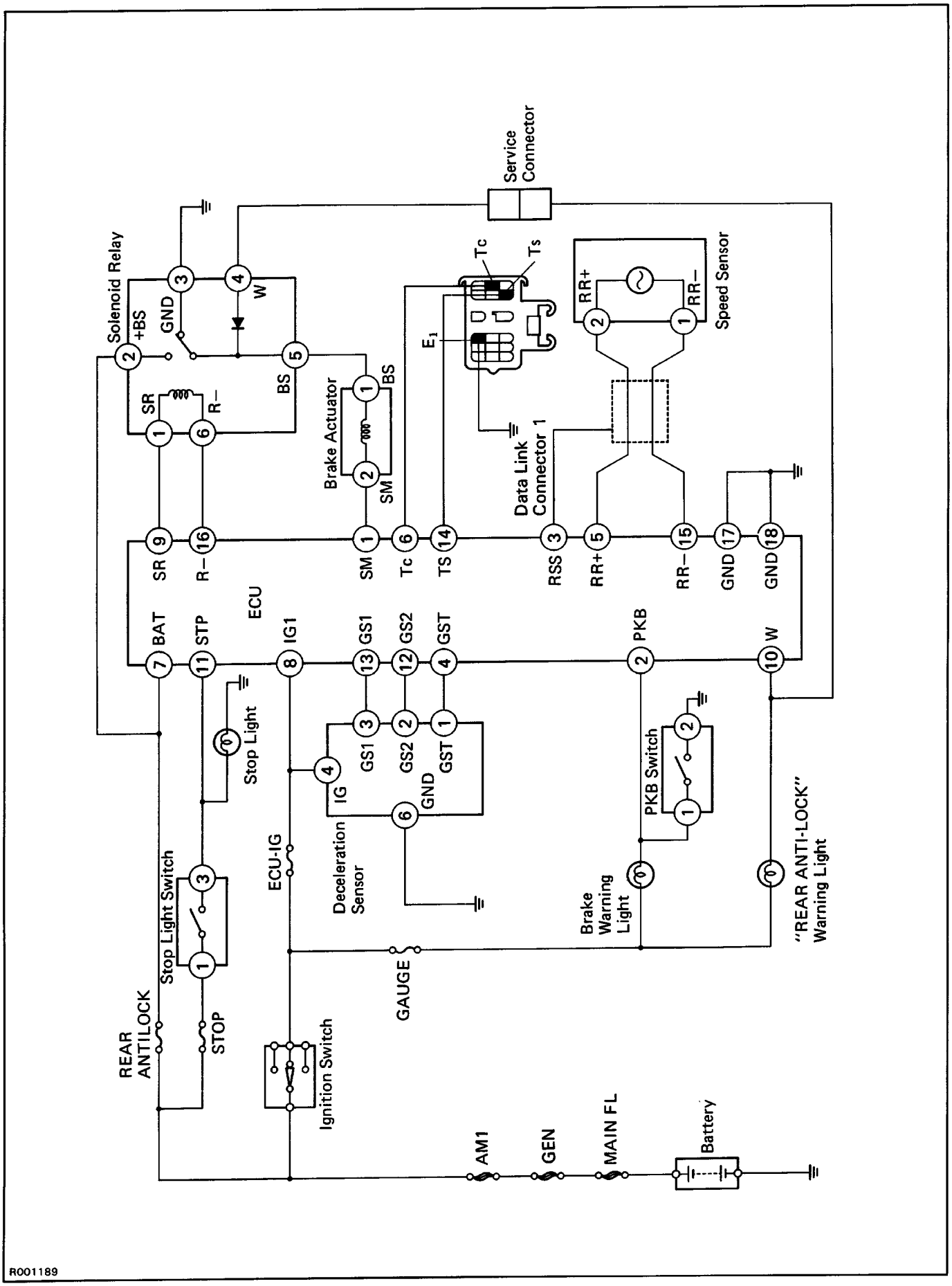

CONNECTORS

Stop Light Switch

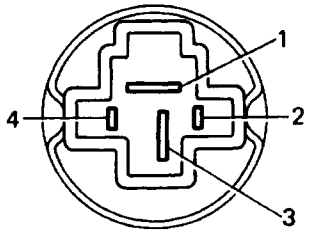

Solenoid Relay

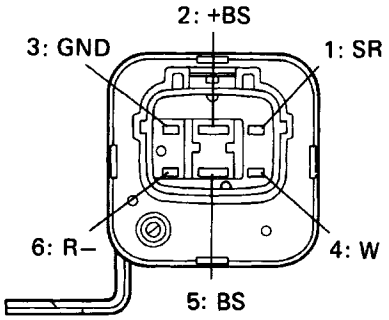

Brake Actuator

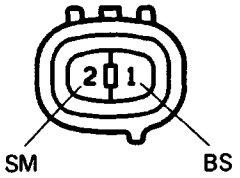

Deceleration Sensor

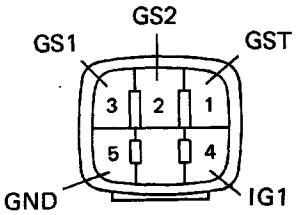

Parking Brake Switch

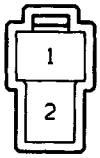

Data Link Connector 1

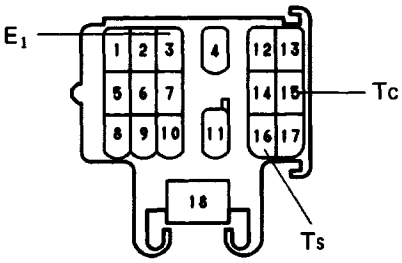

Service Connector

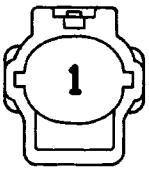

(Solenoid Relay Side)

Speed Sensor

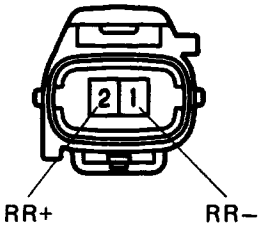

Rear-Wheel Anti-Lock Brake System ECU

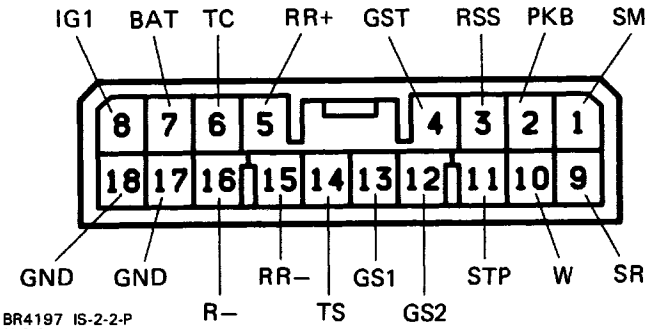

BE0336 BR4197 IS-2-2-P
R01331 H-2-2
SH-18-1 R01332 le-2-2-F
V-18-2

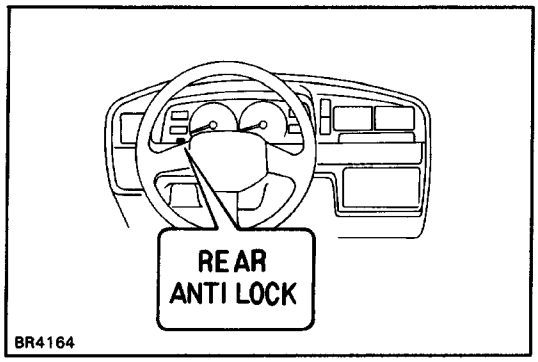

Diagnosis System

DESCRIPTION

If a functional malfunction occurs, diagnosis system will identify the problem and ECU stores the codes for the trouble items.

At the same time, the system informs the driver of a mal–function via the ”REAR ANTILOCK” warning light in the combination meter.

By turning on the ignition switch and disconnecting the service connector, the trouble can be identified by the number of blinks (diagnosis code) of the warning light.

In event of two codes, that having the smallest number (code) will be identified first.

HINT: The warning light do not show the diagnostic trouble codes while the vehicle is running.

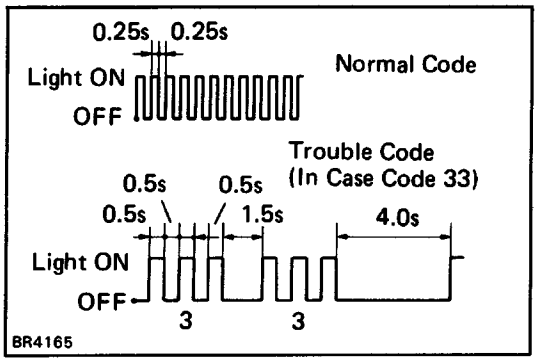

INSPECTION OF DIAGNOSIS SYSTEM

1. INSPECT BATTERY POSITIVE VOLTAGE

Inspect that the battery positive voltage is about 12 V.

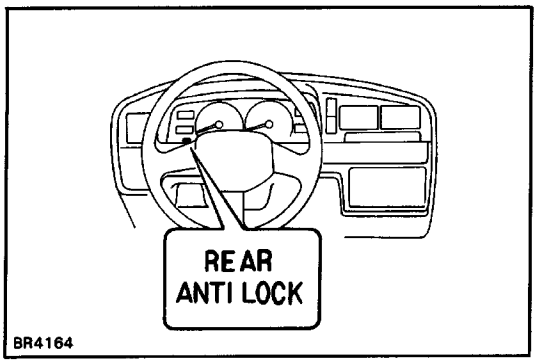

2. CHECK THAT WARNING LIGHT TURNS ON

(a) Turn the ignition switch to ON.

(b) Check that the ”REAR ANTILOCK” warning light turns on for about 3 seconds.

If not, inspect and repair or replace the fuse, bulb and wire harness.

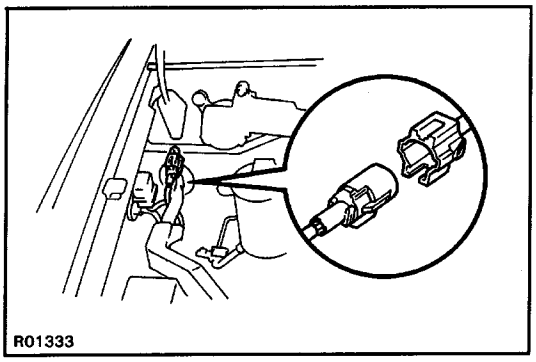

3. READ DIAGNOSTIC TROUBLE CODE

(a) Turn the ignition switch to ON.

(b) Disconnect the service connector.

SST 09843–18020

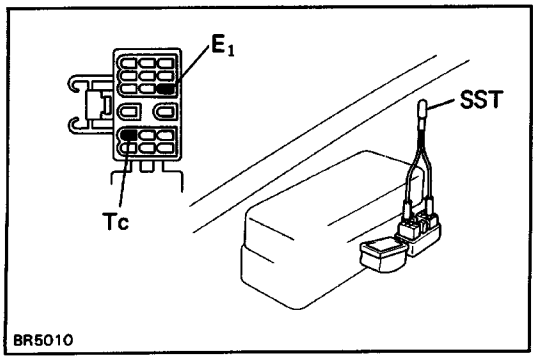

(c) Using SST, connect the terminal Tc to E, of the data link connector 1.

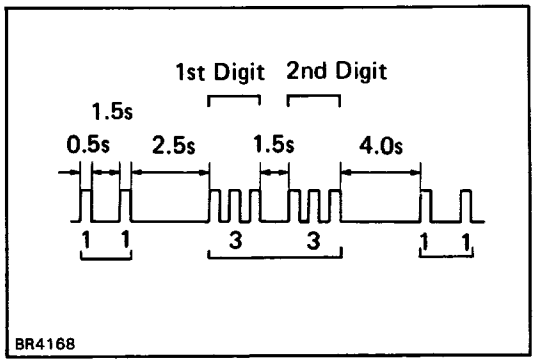

(d) In event of a malfunction, 4 seconds later the warning light will begin to blink. Read the number of blinks.
(See DIAGNOSTIC TROUBLE CODE on page BR–75)
HINT: The first number of blinks will equal the first digit of a two digit diagnostic trouble code. After a 1.5 seconds pause, the 2nd number of blinks will equal the 2nd number of a two digit code. If there are two or more codes, there will be a 2.5 seconds pause between each, and indication will begin after 4.0 seconds pause from the smaller value and continue in order to larger.

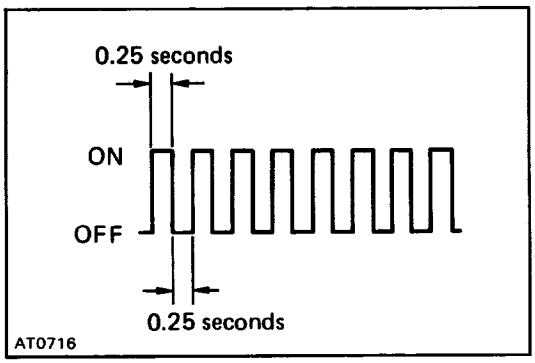

(e) If the system is operating normally (no malfunction), the warning light will blink 2 times per second.

(f) Repair the malfunctioning parts.

(g) After the malfunctioning parts has been repaired, clear the diagnostic trouble codes stored in the ECU . (See page BR–76)
HINT: If you disconnect the battery cable while repairing, all diagnostic trouble codes in the ECU will be erased.

(h) Disconnect the terminal Tc from El of the data link connector 1.

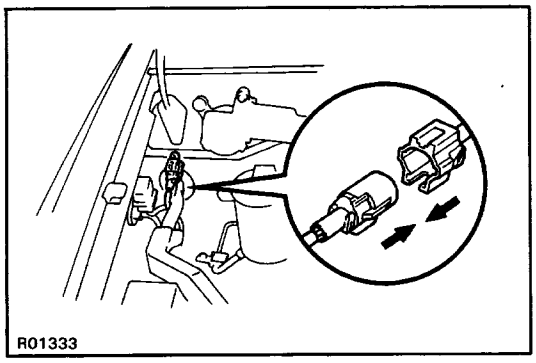

(i) Connect the service connector.
Turn the ignition switch to ON, and check that the ”REAR ANTILOCK” warning light goes off after the warning light goes on for about 2 seconds.

DIAGNOSTIC TROUBLE CODE

Code No.	Light Pattern	Diagnosis	Trouble Part
11	ON OFF	Open circuit in solenoid relay circuit or solenoid circuit	• Solenoid • Solenoid relay • Wire harness and connec–tor of solenoid and/or sole–noid relay circuit
12		Short circuit in solenoid relay circuit	
25		Short circuit in solenoid circuit	
33		Open or short circuit in speed sensor circuit	• Speed sensor • Wire harness and connec–tor of speed sensor circuit
41		Low battery positive voltage (9.5 V or lower	• Battery
42		Abnormally high battery positive voltage 0 7 V or higher)	
43		Mechanical malfunction in deceleration sensor	• Deceleration sensor • Wire harness and connec–tor of deceleration sensor circuit
44		Electrical malfunction in deceleration sensor circuit	
Always ON		Malfunction in ECU	• ECU

BR4169

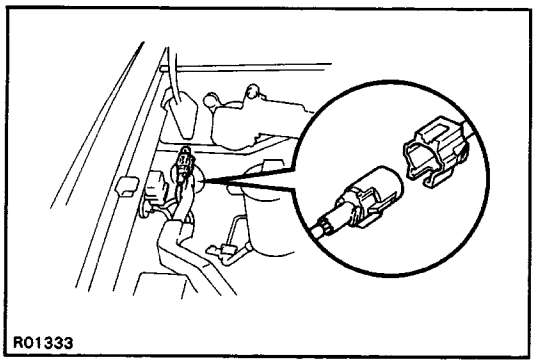

CLEARING OF DIAGNOSTIC TROUBLE CODES

CLEAR DIAGNOSTIC TROUBLE CODES

(a) Turn the ignition switch to ON.

(b) Disconnect the service connector.

HINT: Keep the vehicle stopped (vehicle speed 0 km/h (0 mph)).

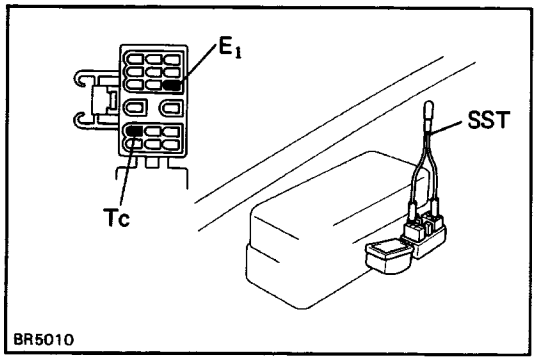

(c) Using SST, connect the terminal Tc to E, of the data link connector 1.

SST 09843–18020

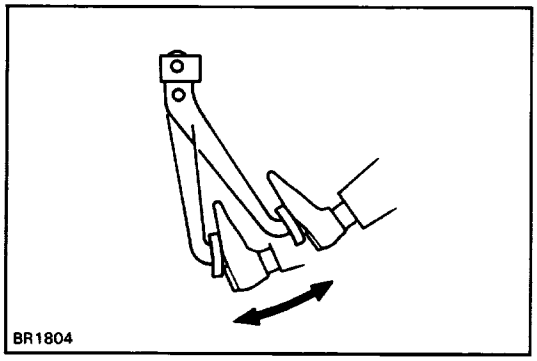

(d) Clear the diagnostic trouble codes stored in ECU by depressing the brake pedal 8 or more times within 3 seconds.

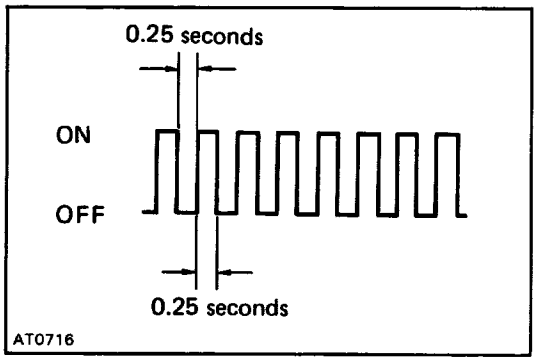

(e) Check that the warning light shows the –normal code.

If the warning light still shows the diagnostic trouble codes, check for cause and repair or replace the trouble

parts, then clear the diagnostic trouble codes again.

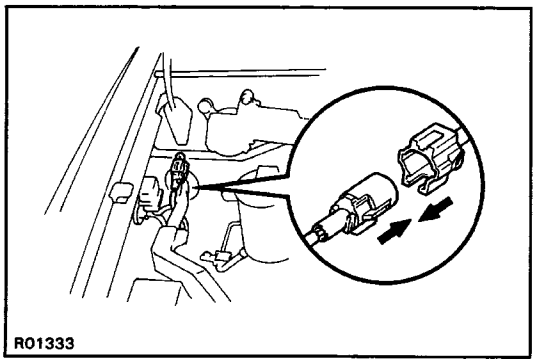

(f) Connect the service connector.

(g) Disconnect the terminal Tc from E, of the data link connector 1.

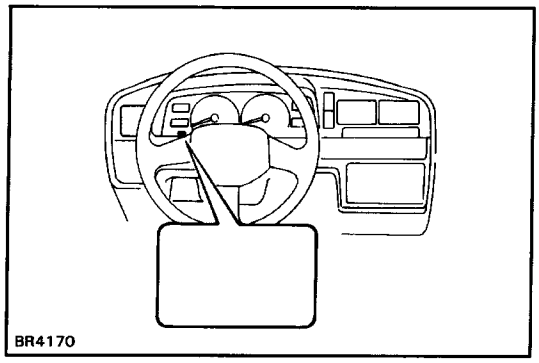

(h) Check that the warning light goes off.

Troubleshooting

Problem		No.
”REAR ANTILOCK” warning light	Always comes on after ignition switch is turned to ON.	1
	Does not come on for about 3 seconds after ignition switch on.	2
	Comes on and off.	3
	Comes on while running.	1
Brake working	Brakes pull.	4
	Braking inefficient.	4
	Rear–Wheel Anti–Lock Brake System operates at ordinary braking.	4
	Rear–Wheel Anti–Lock Brake System operates just before stopping at ordinary braking.	4
	Brake pedal pulsates abnormally while Rear–Wheel Anti–Lock Brake System is operating.	4
	Skidding noise occurs while Rear–Wheel Anti–Lock Brake System working. (Rear–Wheel Anti–Lock Brake System works inefficiently)	5

1 ”REAR ANTILOCK” warning light comes on.

Disconnect service connector and con–nect the terminal Tc to E, of the data link connector 1. (See page BR–73)

↓

Does warning light always come on or show the normal code ?
(Ignition switch on)

NO → See diagnostic trouble code.
(See page BR–75)

↓ YES

Continued on page BR–79

Continued from page BR–78

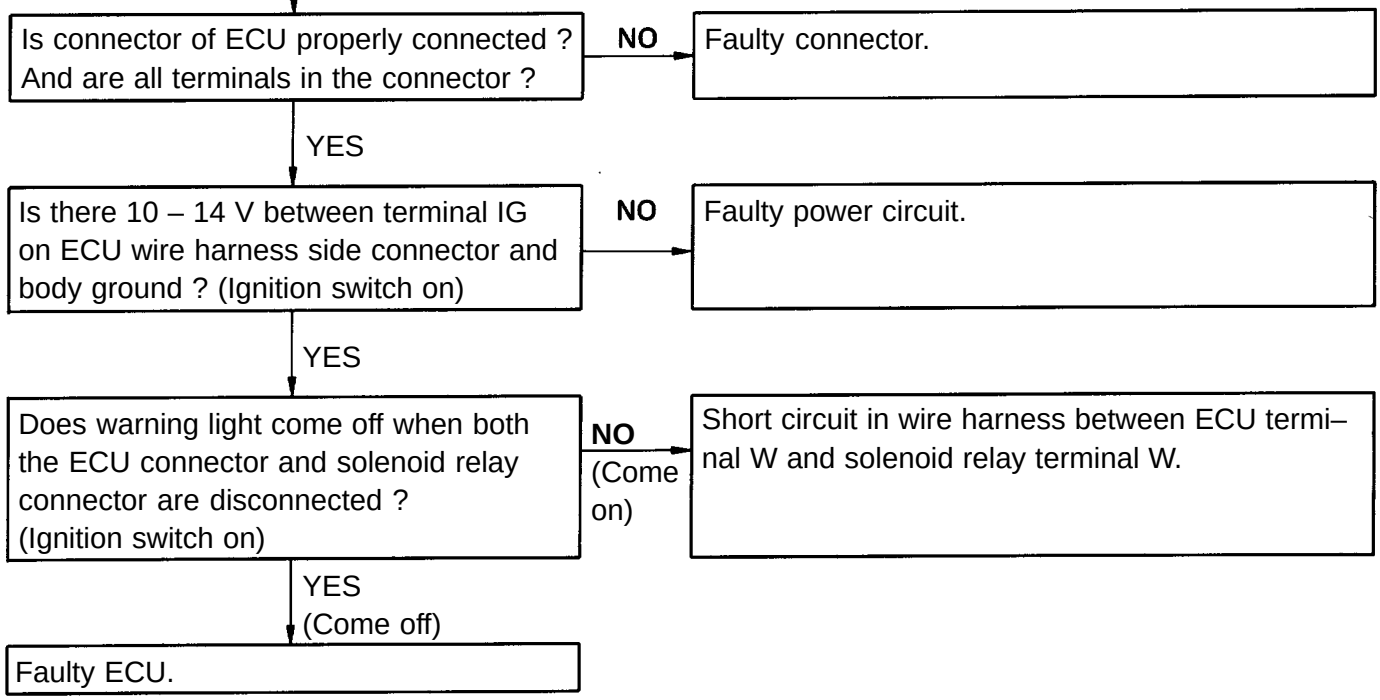

2	**”REAR ANTILOCK” warning light does not come on for about 2 seconds after ignition switch on.**

Disconnect service connector and ground the terminal W of the wire harness side connector. (Ignition switch on)

↓

Does warning light come on ?

NO → Bulb burned out or open circuit in wire harness between warning light and service connector terminal W.

YES ↓

Disconnect connector from ECU and solenoid relay, and ground terminal W of ECU wire harness side connector.
(ignition switch on)

↓

Does warning light come on ?

NO → Open circuit in wire harness between ECU terminal W and warning light.

YES ↓

With ignition switch off, disconnect solenoid relay connector, and check continuity between terminal W and BS on solenoid relay side.

↓

Reverse tester leads and check again. Is there one way continuity between terminals ?

NO → Short circuit in solenoid relay inside diode.

YES ↓

Faulty ECU.

HINT: If the diode is short–circuited, a malfunction at ECU terminal W will occur.
When inspecting the terminal, connect the ECU connector and disconnect solenoid relay connector. Then turn the ignition switch on, and check that the warning light goes on. If it does, the ECU terminal is OK.

3	"'REAR ANTILOCK" warning light comes on and off .

- Short circuit in wire harness between ECU terminal TS and data link connector 1 terminal Ts.
- Short circuit in wire harness between ECU terminal TC and data link connector 1 terminal Tc.

4	• **Braking inefficient.** • **Rear–Wheel Anti–Lock Brake System operates at ordinary braking.** • **Rear–Wheel Anti–Lock Brake System operates just before stopping at ordinary braking.** • **Brake pedal pulsates abnormally while Rear–Wheel Anti–Lock Brake System working.**

Disconnect service connector and con–nect the terminal Tc to E, of the data link connector 1. (See page BR–73)

↓

Does warning light show the diagnostic normal code ? (Ignition switch on)

NO → See diagnostic trouble code. (See page BR–75)

↓ YES

Try deceleration sensor operation diagno–sis system. Is sensor OK ?(See page BR–84)

NO → Faulty deceleration sensor or sensor installation faulty.

↓ YES

Try speed sensor diagnosis system. Is speed sensor OK ? (See page BR–84)

NO → Inspect speed sensor, and replace if necessary.

↓ YES

Is speed sensor installed in place ? And is installation bolt tightened securely ?

NO → Speed sensor– installation faulty.

↓ YES

Continued on page BR–82

Continued from page BR–81

Is there foreign material or ferric chips on the speed sensor tip ?

- YES → Clean chips from speed sensor.
- NO ↓

Disconnect connector from ECU and inspect continuity between speed sensor terminals on wire harness side.

Does any abnormal change occur in continuity when the connector or wire harness of speed sensor and intermediate connectors are twisted or bent ?

- YES (Abnormal change) → Faulty wire harness.
- NO (No change) ↓

Inspect actuator operation. (See page BR–88)

Is actuator operation OK ?

- NO → Faulty actuator.
- YES ↓

Inspect differential ring gear serrations. Are serrations OK ?

- NO → Faulty sensor rotor. (Differential ring gear)
- YES ↓

Faulty ECU.

5	**Rear–Wheel Anti–Lock Brake System works inefficiently.**

Disconnect service connector and connect the terminal Tc to E , of the data link connector
1. (See page BR–73)

↓

Does warning light show the diagnostic normal code ?
(Ignition switch on)

NO → See diagnostic trouble code.
(See page BR–75)

↓ YES

Is there battery positive voltage between ECU terminal STP and body ground when depressing brake pedal ?

NO → Open circuit in stop light switch and/or wire harness.

↓ YES

Inspect actuator.
(See page BR–87)

Deceleration Sensor and Speed Sensor Diagnosis System

PRECAUTION

- While checking the deceleration sensor and speed sen–sor diagnosis system, the Rear–Wheel Anti–Lock Brake System does not work and brake system works as nor–mal brake system.

INSPECTION OF DIAGNOSIS SYSTEM

1. INSPECT BATTERY POSITIVE VOLTAGE

Inspect that the battery positive voltage is about 12 V.

2. CHECK THAT WARNING LIGHT TURNS ON

(a) Turn the ignition switch to ON.

(b) Check that the ”REAR ANTI–LOCK” warning light turns on for about 3 seconds.
If not, inspect and repair or replace the fuse, bulb and wire harness.

(e) Check that the ”REAR ANTI–LOCK” warning light turns off.

(d) Turn the ignition switch to OFF.

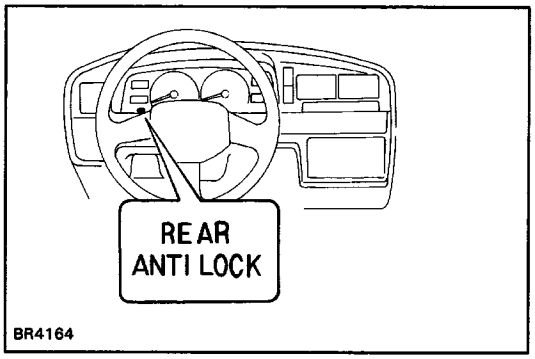

3. PERFORM FOLLOWING STEPS

(a) Using SST, connect the terminal Ts to El of the data link connector 1.
SST 09843–18020

(b) Start the engine.

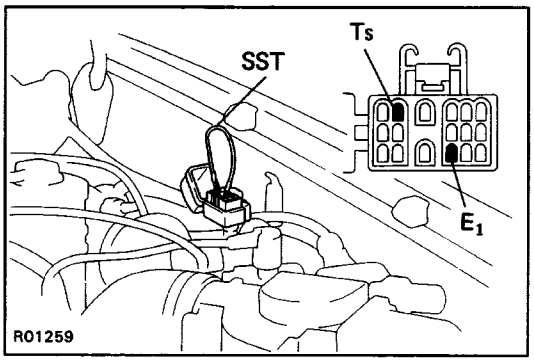

(c) (2 WD model)
Check that the warning light blinks about 4 times every 1 second after blinking 1 time in 1.5 seconds as shown.

(d) (4 WD model)
Check that the warning light blinks about 4 times every 1 second after blinking 2 times in 2.0 seconds as shown.

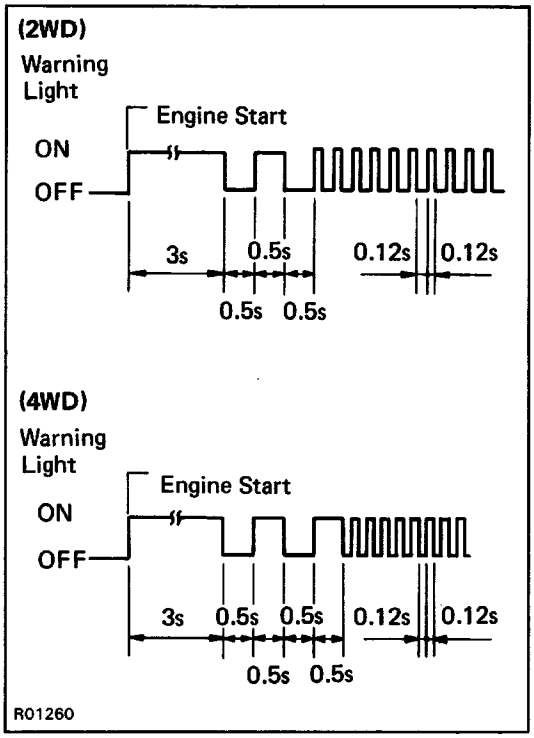

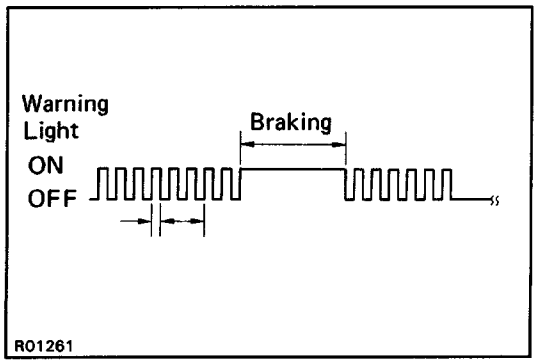

(e) Drive the vehicle straight ahead at about 20 km/h (12.4 mph) or more, depress the brake pedal strongly.

(f) Check that the warning light turns on while braking.

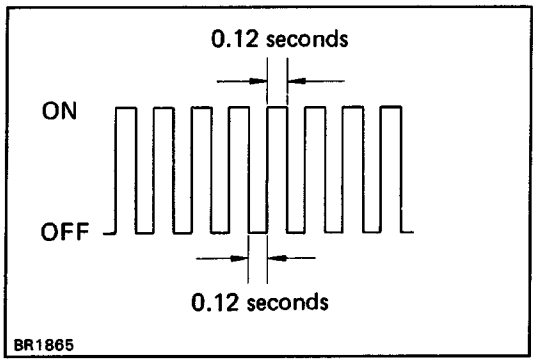

(g) Drive the vehicle straight ahead at about 50 km/h (31 mph) or more, and stop the vehicle.

(h) Check that the warning light blinks about 4 times every 1 second as shown.

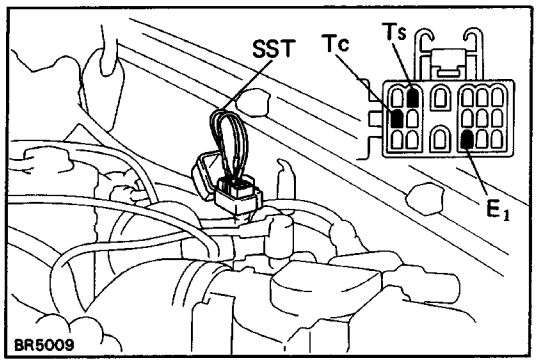

(i) Using SST, connect terminals Tc and E 1 of the data link connector 1.
SST 09843–18020

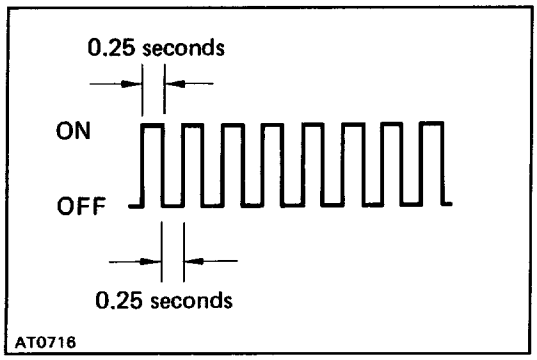

(j) Check that the warning light shows the normal code.

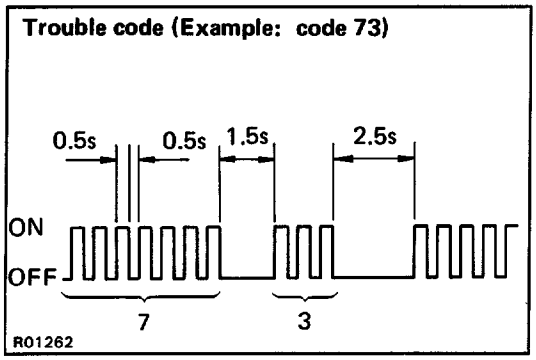

(k) In event of a malfunction, 2.5 seconds later the warning light will begin to blink. Read the number of blinks.
(See DIAGNOSTIC TROUBLE CODE on page BR–86)
HINT: The first number of blinks will equal the first digit of a two digit diagnostic trouble code. After a 1.5 sec–onds pause, the 2nd number of blinks will equal the 2nd number of a two digit code. If there are two or more codes, there will be a 2.5 seconds pause between each,
and indication will begin after 2.5 seconds pause from the smaller value and continue in order to larger.

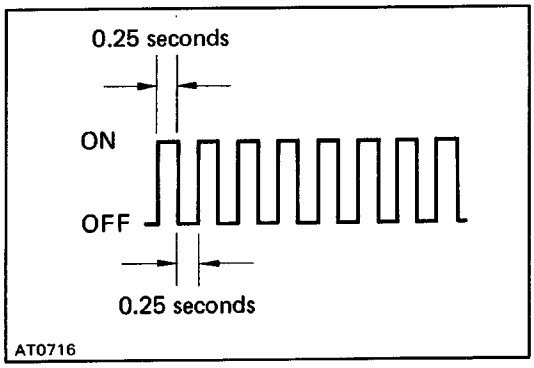

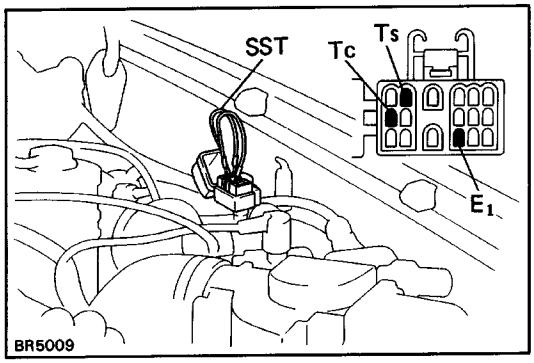

(l) If the system is operating normally (no malfunction), the warning light will blink once every 0.5 seconds.

(m) Repair the system.

(n) After the malfunctioning components have been re–paired, clear the diagnostic trouble codes stored in the ECU.
(See page BR–76)
HINT: If you disconnect the battery cable while re-pair–
ing, all diagnostic trouble codes in the ECU will be erased.

(o) Remove the SST from terminals Ts, Tc and E 1 of the data link connector 1.
SST 09843–18020

DIAGNOSTIC TROUBLE CODE

Code No.	Light Pattern	Diagnosis	MAlfunctioning Part
	ON OFF	Speed sensor and sensor rotor are normal	
73		Low output voltage of speed sensor signal	Speed sensor Sensor rotor Differential ring gear
77		Abnormal change of output voltage of speed sensor signal	Sensor rotor Differential ring gear
79		Sticking of deceleration sensor pendulum	Deceleration sensor

R01263

Brake Actuator
COMPONENTS

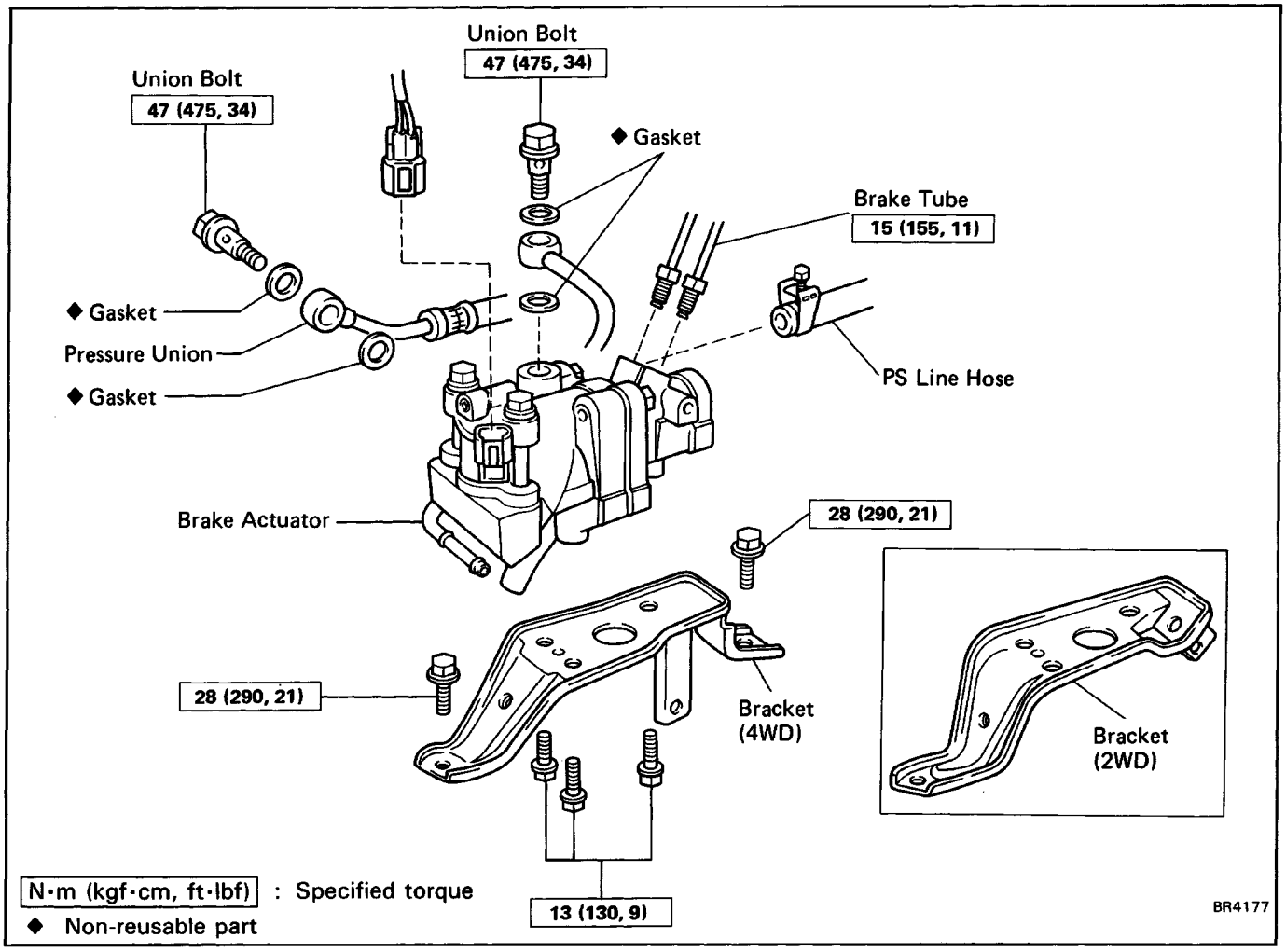

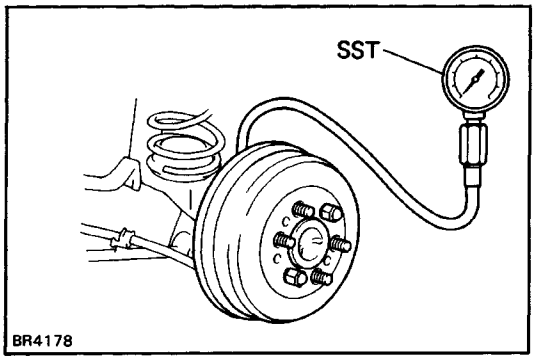

INSPECTION OF BRAKE ACTUATOR

1. CHECK BRAKE FLUID PRESSURE

(a) Remove the bleeder plug from the rear wheel cylin–der and connect SST.
SST 09709–29017

(b) Bleed the air from SST.

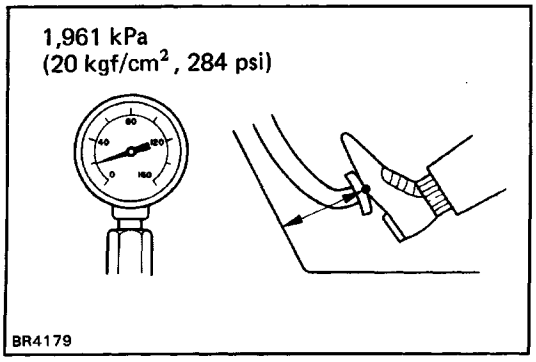

(c) With the engine off, hold the brake pedal depressed for about 10 seconds with the pressure at 1,961 kPa (20 kgf/crn^2, 284 psi), and check that there is no change in the pedal reserve distance.
If there is a change in the brake pedal reserve distance, check the brake line, master cylinder and wheel cylin-der for fluid leakage.

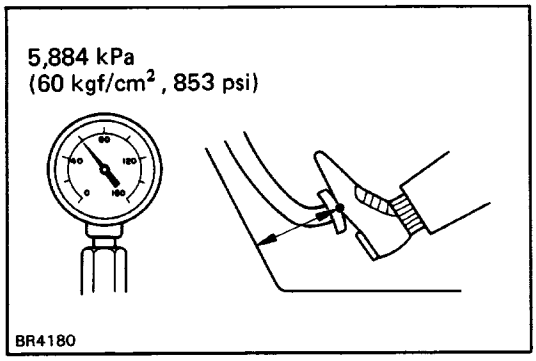

(d) With the engine running, hold the brake pedal de–pressed for about 1 0 seconds with the pressure at 5,844 kPa (60 kgf/cm^2, 853 psi), and check that there is no change in the pedal reserve distance.
If there is a change in the brake pedal reserve distance, inspect the brake actuator.

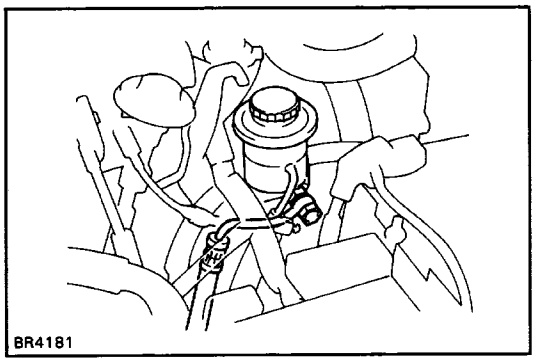

2. CHECK POWER STEERING FLUID PRESSURE

(a) (4WD w/ 22R–E Engine)
Using SST, disconnect the power steering pressure line from the power steering pump.
SST 0963 1–22020

(b) (Except 4WD w/ 22R–E Engine)
Remove the union bolt and disconnect the power steering pressure line from the power steering pump.

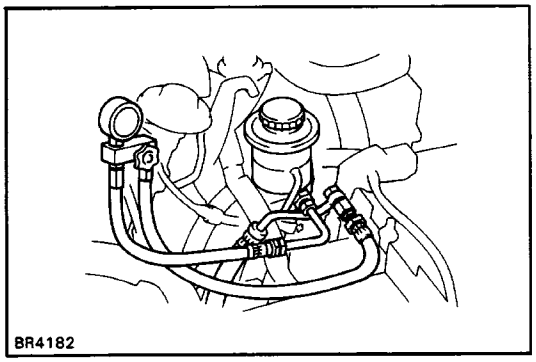

(c) Connect the power steering pressure gauge be–tween the power steering pump and hose with the gauge valve on the actuator side.

(d) Bleed the system and check that the fluid level is correct.
(See page BR–94)

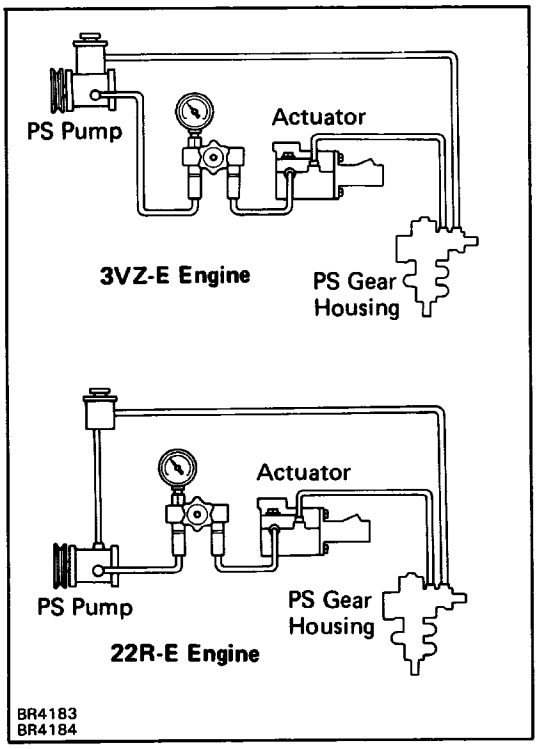

(e) Start the engine and run it at idle.

(f) Close the pressure gauge valve and observe the reading on the gauge.
Minimum pressure: 7,355 kPa (75 kgf/cm^2, 1,067 psi)
HINT:

- Do not keep the valve closed for more than 10 sec. onds.
- Check with the fluid temperature at least 80°C (176°F).

If pressure is low, repair or replace the power steering pump.

3. CHECK RELATION BETWEEN BRAKE FLUID AND POWER STEERING FLUID PRESSURE

HINT:

- Be sure the tires in the straight–ahead position.
- Be sure the power steering pressure gauge valve is; fully open.
- Check with the power steering fluid temperature a–least 80°C (176°F).

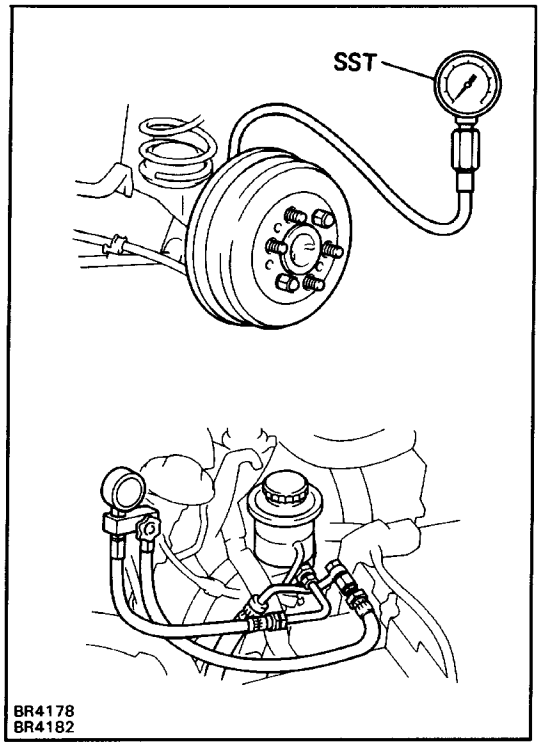

With the engine running, the brake and power steering fluid pressure should conform to the following table.

kPa (kgf/cm^2, psi)

Brake Fluid Pressure	2,941 (30, 427)	9,807 (100, 1,422)
PS Fluid Pressure	1,569 – 2,550 (16 – 26, 228 – 370)	3,236 – 4,609 (33 – 47, 469 – 668)

If not within specification, check the actuator.

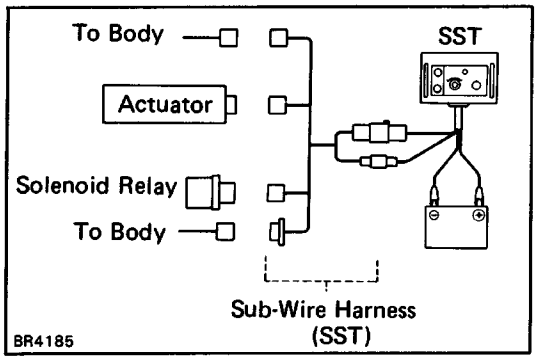

4. CHECK ACTUATOR OPERATION

(a) Disconnect the connector from the actuator.

(b) Disconnect the connector from the solenoid relay.

(c) Connect the actuator checker (SST) to the actuator, solenoid relay and body side wire harness through the sub–wire harness (SST) as shown.
SST 09990–00150 and 09990–00205

(d) Connect the red cable of the checker to the battery positive (+) terminal and black to the negative (–) terminal.

(e) Start the engine, and run it at idle.

(f) Turn the selector switch of actuator checker to ”REAR” position.

(g) Strongly depress the brake pedal and hold it.

(h) Push the ON/OFF switch, and check that the brake pedal sinks a little and that it returns to the original position when the switch is released.
NOTICE:

- **To avoid damaging the master cylinder piston cup, do not push on SST switch before depressing the brake pedal and do not release your foot from the brake pedal while SST switch is pushing on.**
- **Do not keep the ON/OFF switch pushing more than 10 seconds.**

If operation is not as specified, replace the actuator.

(i) Release the switch, then release the brake pedal.

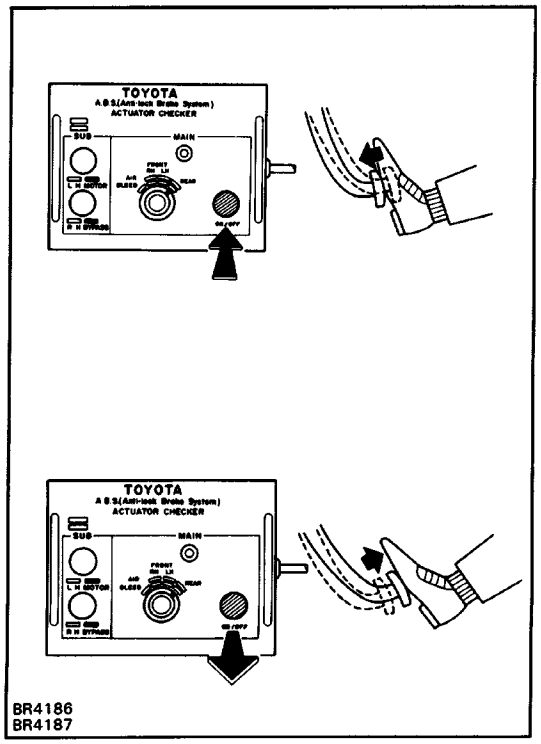

5. REMOVE ACTUATOR CHECKER (SST)

Remove SST, then connect the connectors of the actua–tor and solenoid relay.
SST 09990–00150 and 09990–00205

6. REMOVE SST FROM WHEEL CYLINDER

SST 09709–29017

7. REMOVE PRESSURE GAUGE FROM PS PUMP

Remove the pressure gauge from the PS line, then bleed the power steering system.

8. BLEED SYSTEM

(a) Fill brake reservoir with brake fluid.
(b) Fill PS reservoir with fluid.
Fluid type: ATF DEXRON© II
(c) Bleed the system.
(See page BR–94)

REMOVAL OF BRAKE ACTUATOR

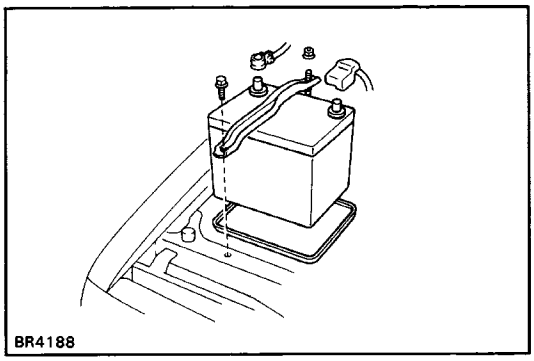

1. REMOVE BATTERY

Disconnect the wire harnesses from the terminals and re–move the battery and tray.

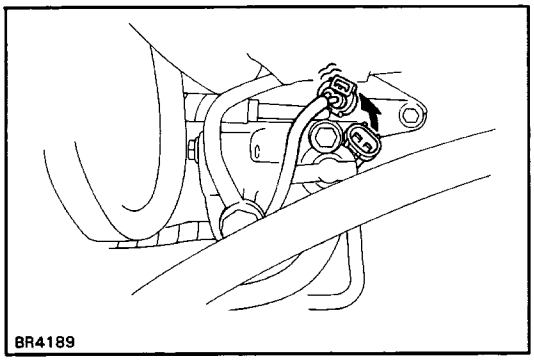

2. DISCONNECT CONNECTOR

Disconnect the connector from the actuator.

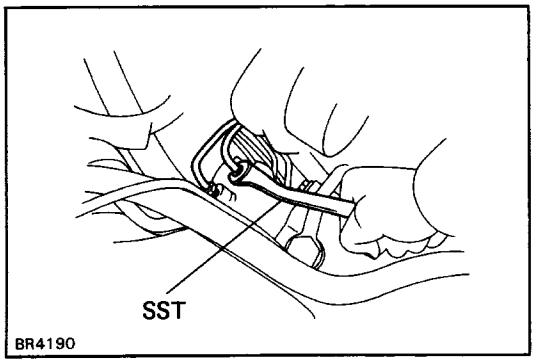

3. DISCONNECT TWO BRAKE TUBES

Using SST, disconnect the two brake tubes.
SST 09751–36011

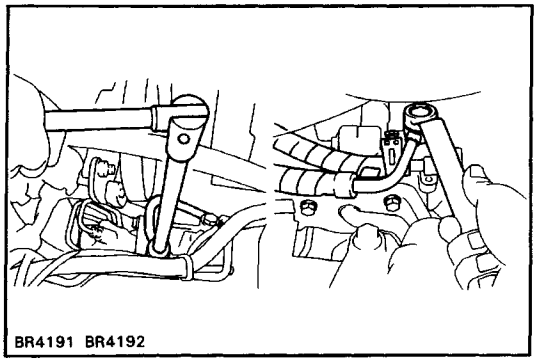
BR4191 BR4192

4. DISCONNECT POWER STEERING LINES FROM ACTUA–TOR

HINT: Turn the steering wheel clockwise until it locks before disconnecting the PS lines. And if you cannot work from the upper side, work from the wheel house.

(a) Remove the two union bolts and disconnect the two power steering pressure tubes.

(b) (22R–E Engine)
Disconnect the power steering line hose.

(c) (3VZ–E Engine)
Disconnect the two power steering line hoses.

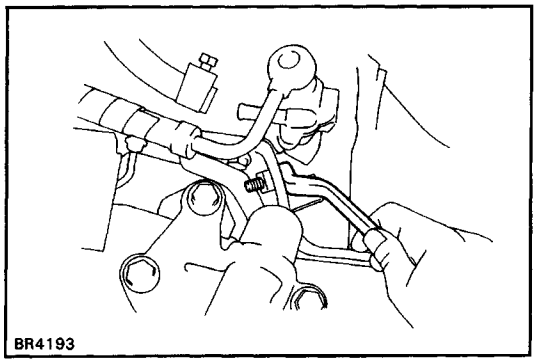
BR4193

5. REMOVE PS TUBE CLAMP INSTALLATION BOLT

Remove the installation bolt of the power steering tube clamp.

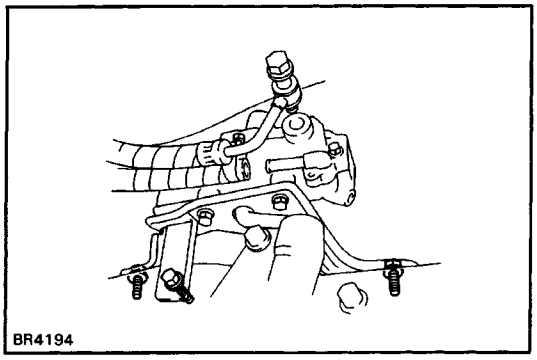
BR4194

6. REMOVE ACTUATOR

Remove the three bolts and remove the actuator from the wheel house.

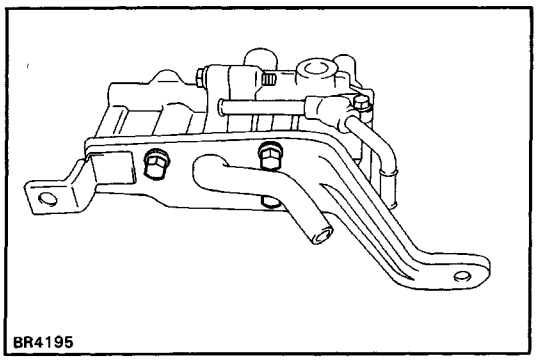
BR4195

7. REMOVE BRACKET FROM ACTUATOR

Remove the three bolts and separate the actuator and bracket.

INSTALLATION OF BRAKE ACTUATOR

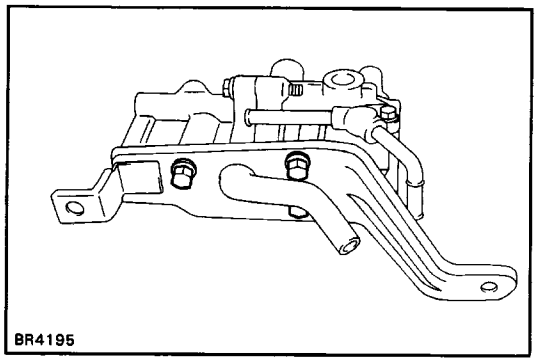

1. INSTALL BRACKET TO ACTUATOR

Install the bracket to the actuator with the three bolts.
Torque: 13 N–m (130 kgf–cm, 9 ft–lbf)

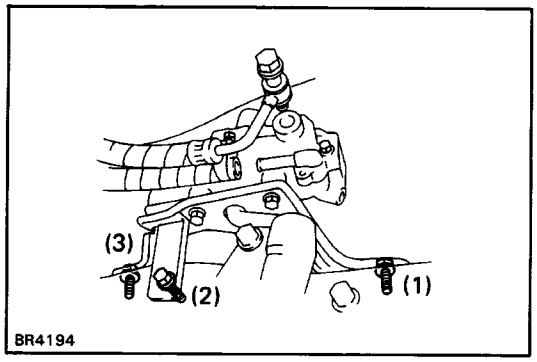

2. INSTALL ACTUATOR

Install the actuator in place and tighten the three bolts.
Torque: 28 N–m (290 kgf–cm, 21 ft–lbf)
HINT: Install the bolts in following order.
(1) Front side bolt
(2) Wheel house side bolt of rear bolts
(3) Upper side bolt on frame of rear bolts

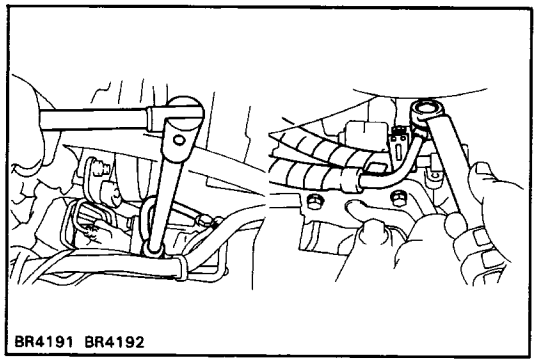

3. CONNECT POWER STEERING LINES

(a) Set the pressure union and new gaskets in place, then install the union bolt.
Torque: 47 N–m (475 kgf–cm, 34 ft–lbf)
(b) Similarly connect the other pressure tube.
(c) Connect the PS line hose to the actuator, then fix it with the hose clamp.
(d) (3VZ–E Engine)
Similarly connect the other PS line hose.

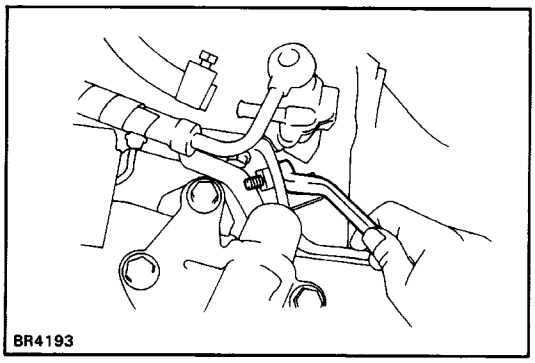

4. INSTALL PS TUBE CLAMP

Install the PS pressure tube clamp in place and tighten the bolt.

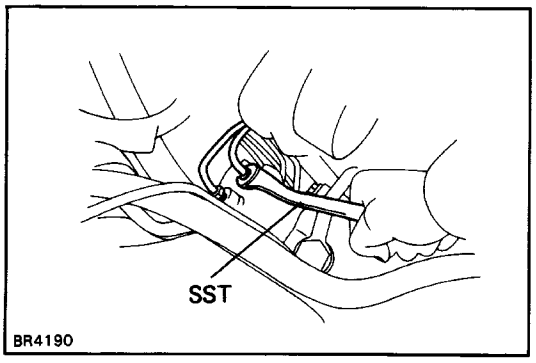

5. CONNECT TWO BRAKE TUBES

Using SST, connect the two brake tubes to the actuator.
SST 09751–36011
Torque: 15 N–m (155 kgf–cm, 11 ft–lbf)
HINT: First connect the painted brake tube to the painted hole of the actuator, then the other.

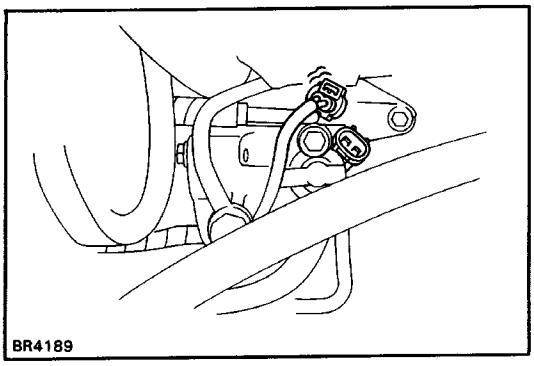

6. CONNECT CONNECTOR

Connect the connector to the actuator.

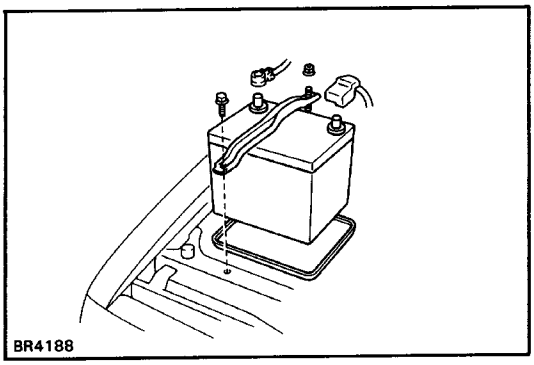

7. INSTALL BATTERY

Install the tray and battery in place, then connect the wire harnesses to the terminals.

8. BLEED SYSTEM

(a) Fill brake reservoir with brake fluid.

(b) Fill PS reservoir with fluid.

Fluid type: ATF DEXRON©II

(c) Bleed the system.

(See page BR–94)

BLEEDING OF REAR–WHEEL ANTI–LOCK BRAKE SYSTEM

HINT: Whenever PS hoses or PS pressure tube are dis–connected or actuator is removed from the vehicle, the Rear–Wheel Anti–Lock Brake System should be bled in the following procedure.
At the other times, use the conventional procedure.

1. BLEED POWER STEERING SYSTEM

Use the conventional procedure.

2. BLEED BRAKE SYSTEM

(a) Bleed the system with the engine running.
(b) Bleed the system with the engine off.

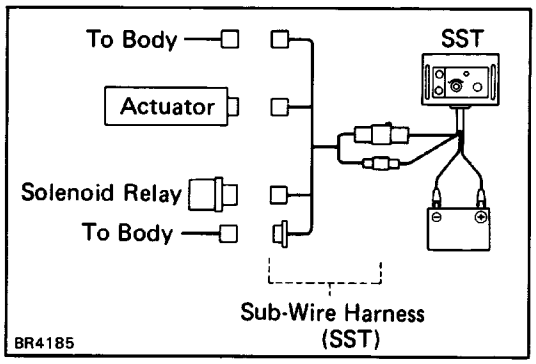

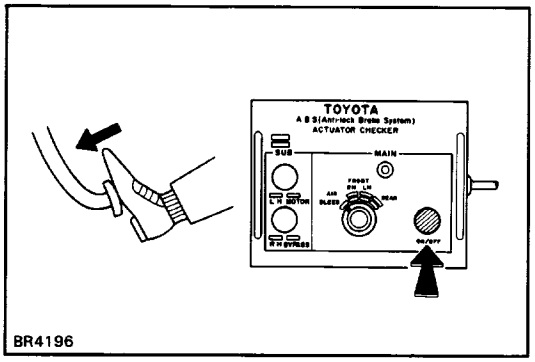

3. BLEED POWER STEERING SYSTEM AGAIN

(a) Disconnect the connector from the actuator.
(b) Disconnect the connector from the solenoid relay.
(c) Connect the actuator checker (SST) to the actuator, solenoid relay and body side wire harness through the sub–wire harness (SST) as shown.
SST 09990–00150 and 09990–00205
(d) Connect the red cable of the checker to the battery positive (+) terminal and black to the negative¿ –) terminal.
(e) Start the engine, and run it at idle.
(f) Turn the selector switch of actuator checker to ”AIR BLEED” position.
(g) Strongly depress the brake pedal and hold it.
(h) Push on and release the ON/OFF switch three sec–onds each for five times.

NOTICE:

- **To avoid damaging the master cylinder piston cup, do not push on SST switch before depressing the brake pedal and do not release your foot from the brake pedal while SST switch is pushing on.**
- **Do not keep the ON/OFF switch pushing more than 10 seconds.**

(i) Release the switch, then release the brake pedal.
(j) Check the PS and brake fluid level, and add the fluid if necessary.
(k) Remove SST, then connect the connectors of the actuator and solenoid relay.
SST 09990–00150 and 09990–00205

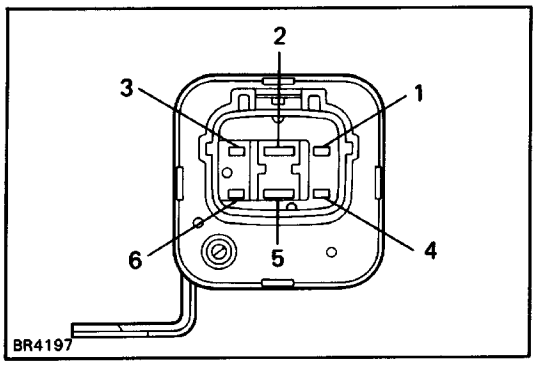

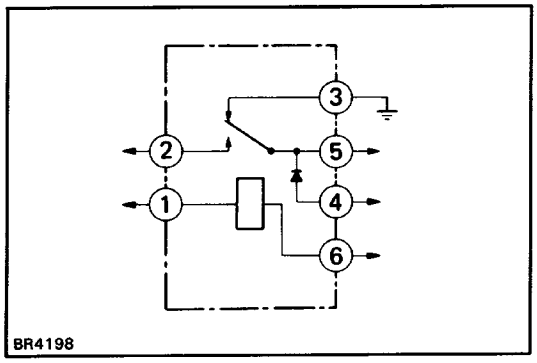

Control Relay

INSPECTION OF SOLENOID RELAY

INSPECT SOLENOID RELAY OPERATION

Inspect the relay continuity between terminals.

Terminal / Condition	6	1	2	3	5	4
Constant	○	○		○	○	○
Apply battery positive voltage between terminals 1 and ’6			○		○	○

If relay operation is not as specified, replace the solenoid relay.

Speed Sensor

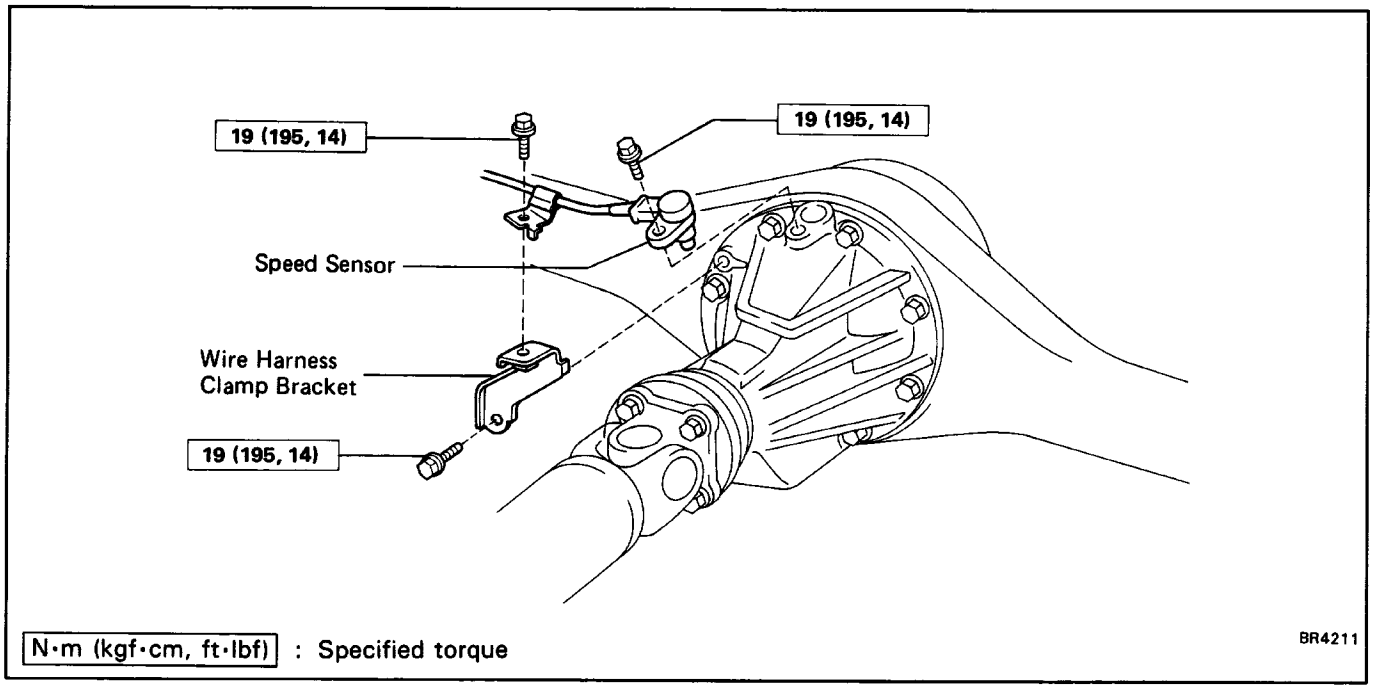

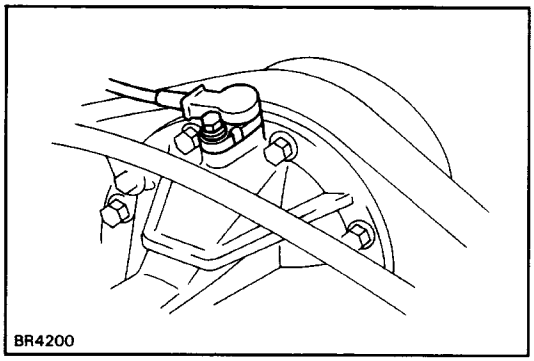

INSPECTION OF SPEED SENSOR

1. INSPECT SENSOR INSTALLATION

Check that the sensor installation bolt is tightened properly.

If not, tighten the bolt.

Torque: 19 N–m (195 kgf–cm, 14 ft–lbf)

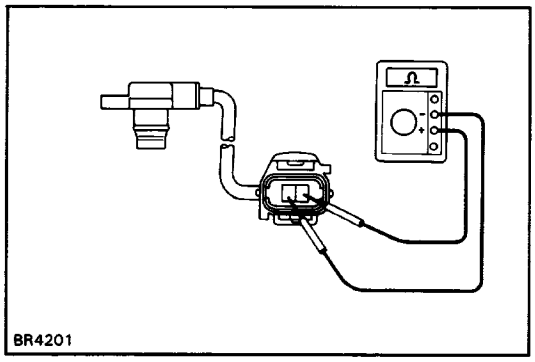

2. INSPECT SPEED SENSOR

(a) Disconnect the speed sensor connector.

(b) Measure the resistance between terminals.

Resistance: 580 – 700Ω

If resistance value is not as specified, replace the sensor.

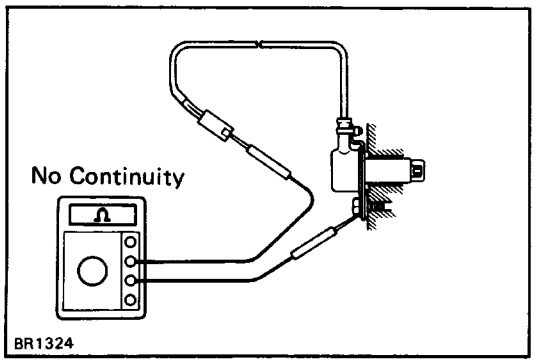

(c) Check that there is no continuity between each terminal and sensor body.

If there is continuity, replace the sensor.

(d) Connect the speed sensor connector.

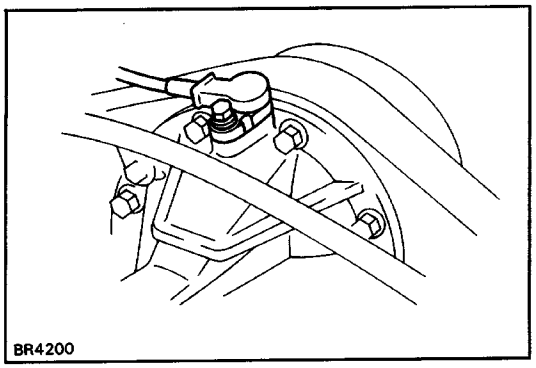

3. VISUALLY INSPECT SENSOR ROTOR SERRATIONS

(a) Disconnect the speed sensor wire harness clamp bolt.

(b) Remove the speed sensor installation bolt and pull out the speed sensor.

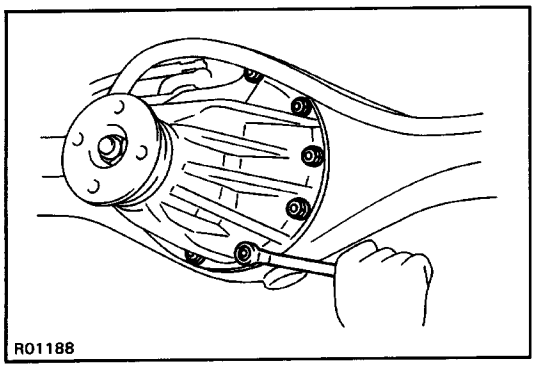

(c) Remove the differential carrier assembly.
(See page SA–136)

NOTICE: To prevent damage to the ring gear serrations, do not strike the ring gear.

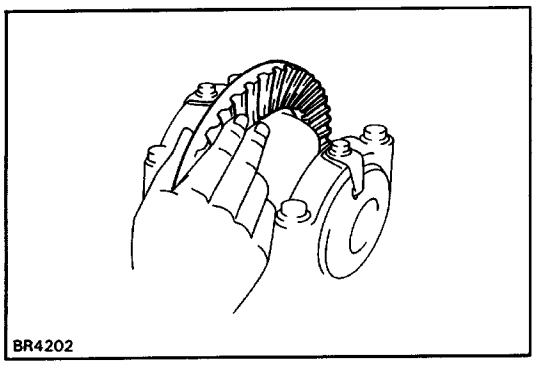

(d) Inspect the ring gear (sensor rotor) serrations for scratches, cracks, warping or missing teeth.
If necessary, replace the ring gear.

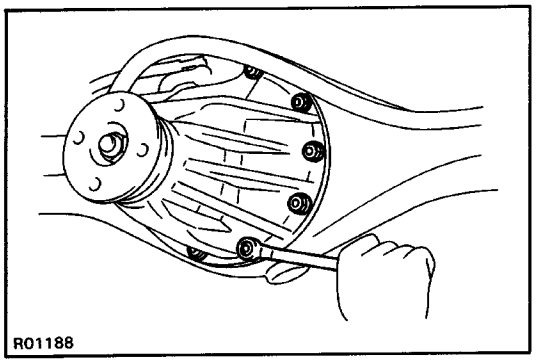

(e) Install the differential carrier assembly.
(See page SA–151)

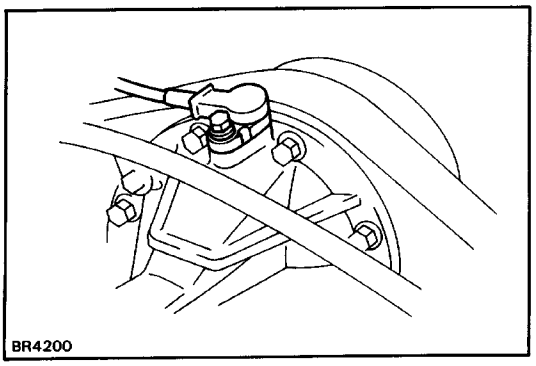

(f) Install the speed sensor and tighten the installation bolt.
Torque: 19 N–m (195 kgf –cm, 14 ft–lbf)

(g) Set the speed sensor wire harness clamp in place and tighten the clamp bolt.
Torque: 19 N–m (195 kgf–cm, 14 ft–lbf)

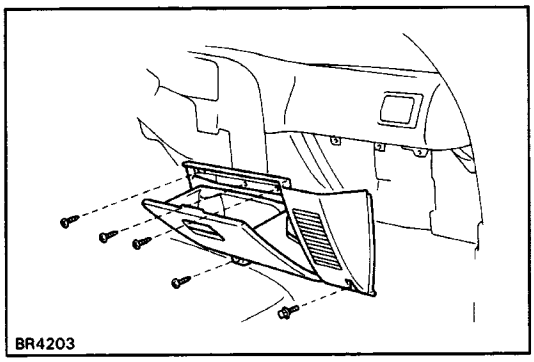

INSPECTION OF SPEED SENSOR AND SENSOR ROTOR SERRATIONS (REFERENCE)

INSPECT SPEED SENSOR AND SENSOR ROTOR SERRA–TIONS BY USING AN OSCILLOSCOPE

(a) Remove the glove box assembly and disconnect the radio speaker connector.

(b) Disconnect the connector from the rear–wheel anti–lock brake system ECU.

(c) Connect an oscilloscope to the terminals RR + and RR – on the wire harness side connector.

(d) Run the vehicle at 20 km/h 0 2.4 mph), and inspect speed sensor output wave.

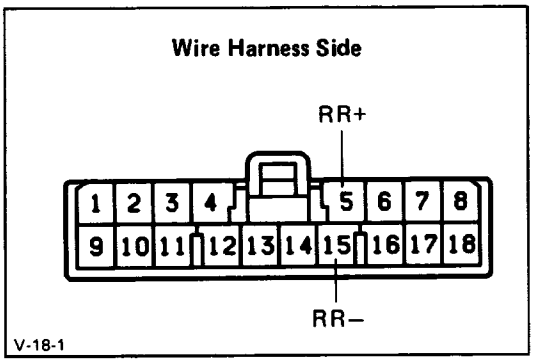

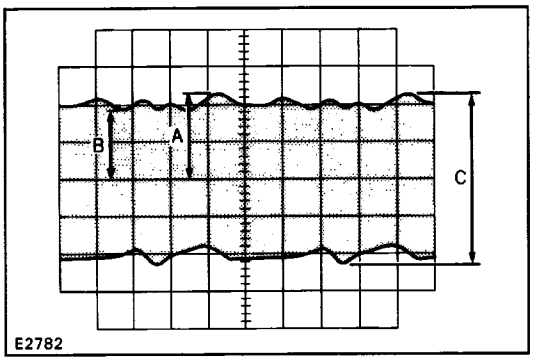

(e) Check that C is 0.4 V or more.
If it is not as specified, replace the speed sensor.
M Check that B is 70% or more of A.
If it is not as specified, replace the sensor rotor.

(g) Remove the oscilloscope and connect the connector to the ECU.

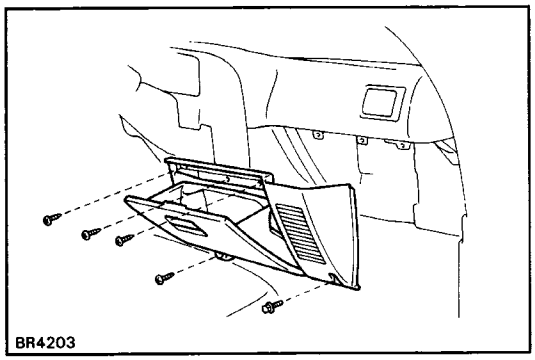

(h) Connect the radio speaker connector and install the glove box assembly.

Deceleration Sensor

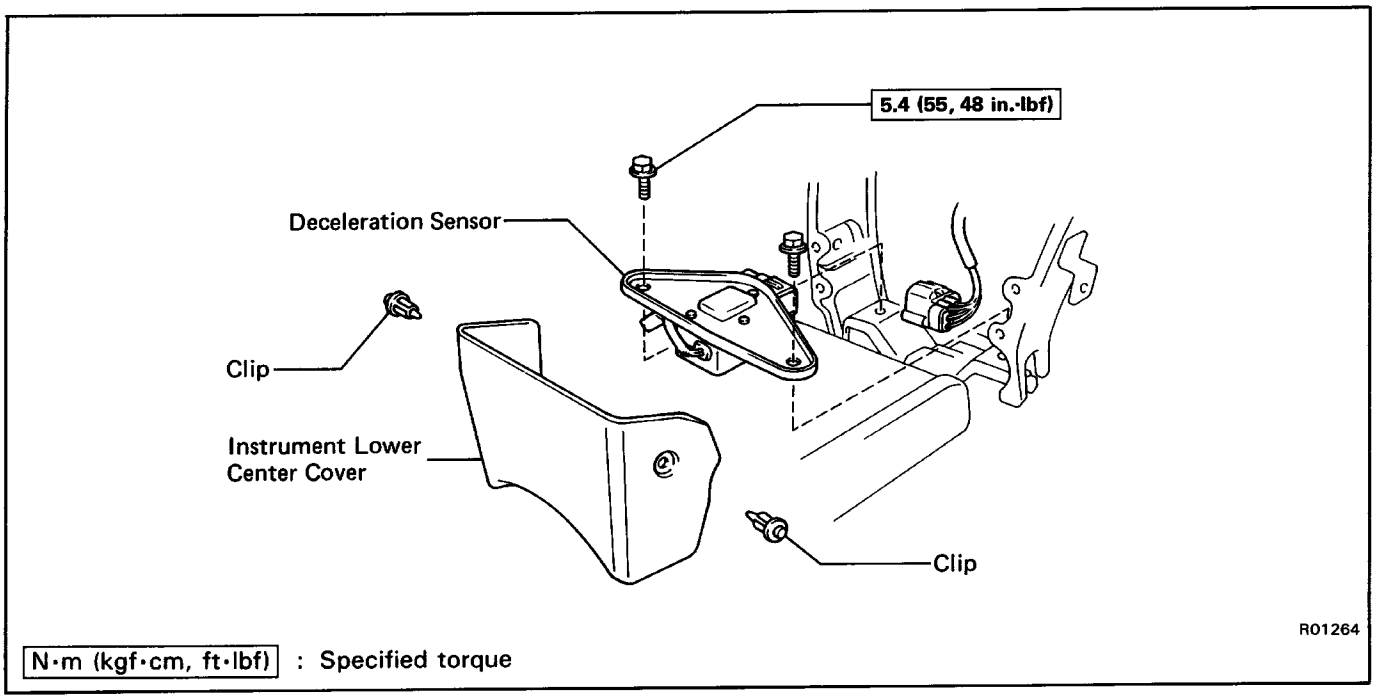

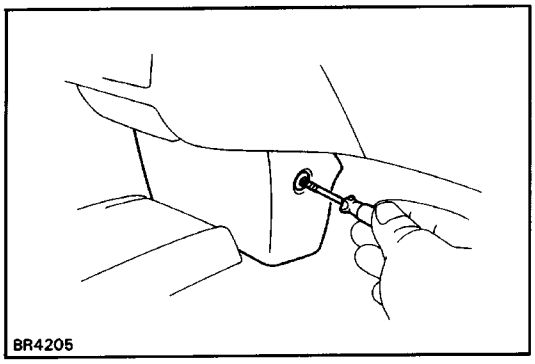

INSPECTION OF DECELERATION SENSOR

INSPECT SENSOR INSTALLATION

(a) Remove the two clips, then remove the instrument lower center cover.

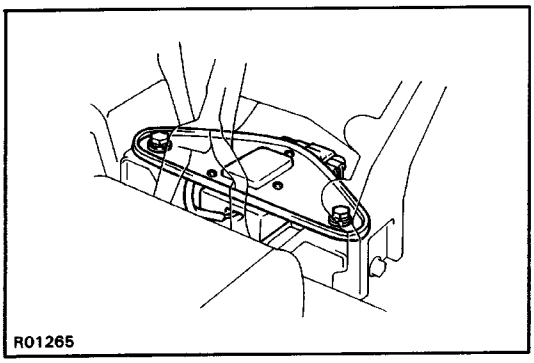

(b) Inspect that the sensor direction is correct.

(c) Check that the sensor installation bolts are tight–ened properly.

If not, tighten the bolts.

Torque: 5.4 N–m (55 kgf–cm, 48 in.–lbf)

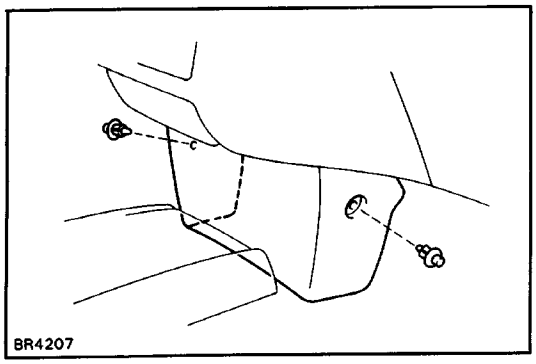

(d) Install the instrument lower center cover and two clips.

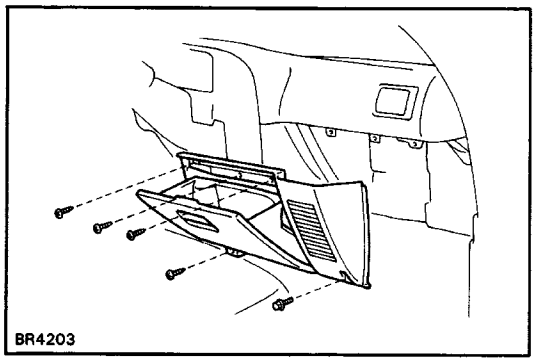

Rear–Wheel Anti–Lock Brake System Circuit

REMOVAL OF REAR–WHEEL ANTI–LOCK BRAKE SYSTEM ECU

1. REMOVE GLOVE BOX ASSEMBLY

Remove the four screws and a bolt, then remove the glove box assembly and disconnect the radio speaker connector.

2. REMOVE ECU

(a) Remove the two screws and a nut.

(b) Pull out the ECU.

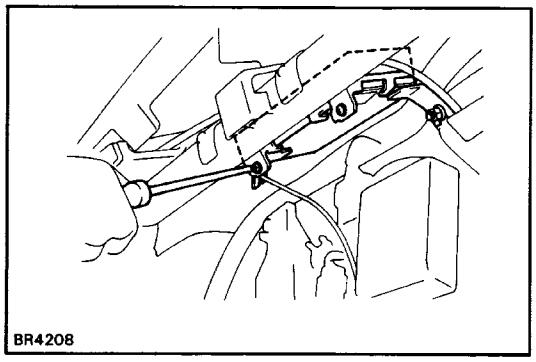

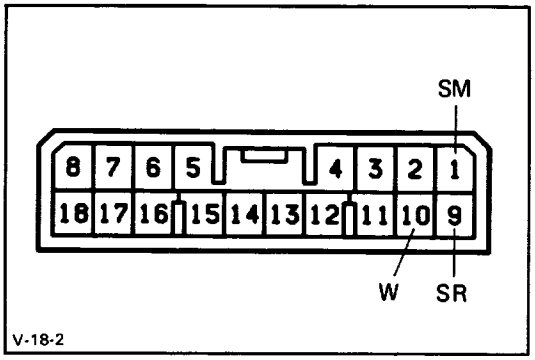

INSPECTION OF SYSTEM CIRCUIT

1. INSPECT SYSTEM CIRCUIT WITH CONNECTOR CON–NECTED

Using a voltmeter with high impedance (10 kΩN mini–mum), measure the voltage at each terminal and body ground.

Tester Connection	Condition	Voltage	Trouble Part
SM – Body ground	Ignition switch ON	Battery positive voltage	Solenoid relay, Actuator
	Ignition switch ON and "REAR ANTILOCK" warning light goes on	About 0 V	
SR – Body ground	Ignition switch ON	Battery positive voltage	
	Ignition switch ON and "REAR ANTILOCK" warning light goes on	About 0 V	
W – Body ground	Ignition switch ON	Battery positive voltage	Warning light bulb
	Ignition switch ON and "REAR ANTILOCK" warning light goes on	About 0 V	

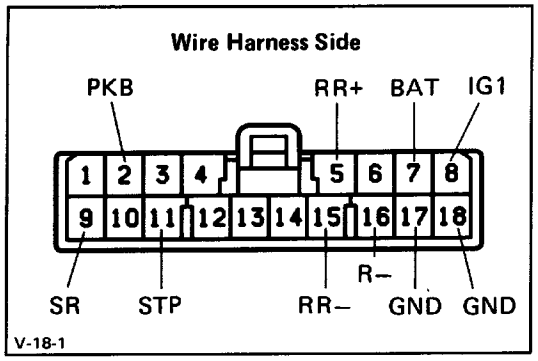

2. INSPECT SYSTEM CIRCUIT WITH CONNECTOR DIS–CONNECTED

(a) Disconnect the connector from the ECU and inspect at the wire harness side connector.

Tester Connection	Check Item	Condition	Voltage or Resistance Value	Trouble Part
PKB – Body ground	Voltage	Ignition SW on and PKB lever pulled	About 0 V	PKB switch, level warning switch
		Ignition SW on and PKB lever returned	Battery positive voltage	
RR+ – RR–	Resistance	–	580 – 700 Ω	Speed sensor
BAT – Body ground	Voltage	–	Battery positive voltage	Wire harness
IG1 – Body ground	Voltage	Ignition SW on	Battery positive voltage	ECU–IG fuse, wire harness
		Ignition SW off	About 0 V	
SR – R–	Resistance	–	80 Ω	Solenoid relay
STP – Body ground	Voltage	Ignition SW off and brake pedal depressed	Battery positive voltage	Stop light switch, stop light
	Continuity	Ignition SW off and brake pedal returned	Continuity	
GND – Body ground	Continuity	–	Continuity	Wire harness

If the circuit is not as specified, check and repair or replace the trouble part shown in the table above.

(b) Connect the connector.

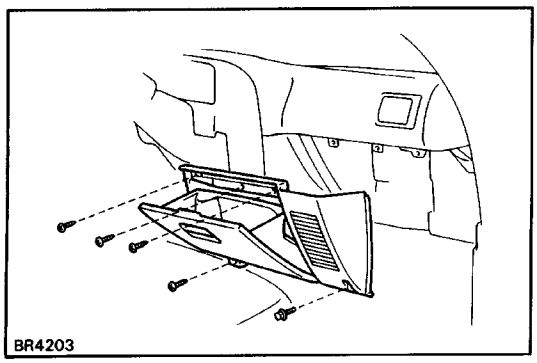

INSTALLATION OF ECU

1. INSTALL ECU

Install the ECU in place with a nut and two screws.

2. INSTALL GLOVE BOX ASSEMBLY

Connect the radio speaker connector and install the glove box assembly in place and install the four screws and a bolt.